Stock Code: 8069

E INK HOLDINGS INC.

Notice to readers

This English-version annual report is a summary translation of the Chinese version and is not an official document of the shareholders' meeting. If there is any discrepancy between the English and Chinese versions, the Chinese version shall prevail.

2024 Annual Report

Taiwan Stock Exchange Market Observation Post System：
http://mops.twse.com.tw
EIH annual report is available at：http://www.eink.com
Printed on March 30, 2025

Spokesperson

Lloyd Chen, Chief Financial Officer
Tel: 886-3-5643200
lloyd.chen@eink.com

Deputy Spokesperson

Patrick Chang, Senior Director of Financial Division
Tel: 886-3-5643200
patrick.yp.chang@eink.com

Headquarters, Branches and Plant

E INK HOLDINGS INC.
No.3, Lixing 1st Rd., HsinChu Science Park, HsinChu, Taiwan 300, R.O.C.
Tel: 886-3-5643200

- Hsinchu
  No.3, Lixing 1st Rd., Hsinchu Science Park, Hsinchu 300, Taiwan
  Tel: 886-3-5643200
- Linkou
  No.199 Hwaya Road 2, Kueishan, Taoyuan 33383, Taiwan
  Tel: 886-3-3960800

Stock Transfer Agent

SinoPac Securities
3F, No.17 Po Ai Rd., Taipei, Taiwan, R.O.C.
Tel: 886-2-2381-6288
https://agencyaffairs.sinotrade.com.tw

Auditors

Deloitte & Touche
Name of CPAs: Hui-Min Huang、Ya-Ling Weng
20F, Taipei Nan Shan Plaza, No. 100, Songren Rd., Xinyi Dist., Taipei 11073, Taiwan
Tel: 886-2-2725-9988
http://www.deloitte.com.tw

Names of overseas securities exchanges where securities are listed for trading and ways to inquire about information on those overseas securities.

Trading house: Luxembourg Stock Exchange
Inquiry method: Bloomberg
Website: http://www.bourse.lu/

Corporate Website

http://www.eink.com

Contents

I. Letter to Shareholders *2*
2024 Business Report 2
II. Corporate Governance Report *7*
2.1 Directors and Management Team 7
2.2 Corporate governance 20
2.3 Information Regarding the Company's Audit Fee and Independence 59
2.4 Information on the replacement of CPAs in the last 2 years and beyond. 59
2.5 Working in the capacity as the chairman, president, financial and accounting manager with the CPA office retained for auditing service or its affiliates in the most recent year. 59
2.6 Changes in Shareholding of Directors, Supervisors, Managers and Major Shareholders 60
2.7 Relations among the Top 10 shareholders by quantity of shareholding. 61
2.8 Shareholdings of the Company, its Directors, Executives, and Entities Directly or Indirectly Controlled by the Company in the Same Investee Company, and the Consolidated Comprehensive Shareholding Percentage . 62
III. Capital Overview *63*
3.1 Capital and Shares 63
3.2 Corporate Bonds. 68
3.3 Preferred Stock. 68
3.4 Global Depository Receipts 69
3.5 Employee Stock Option Certificate Processing Status 69
3.6 The Offering of Restricted Stock. 70
3.7 Merger and acquisition, and acceptance of assigned shares from other Company for issuing new shares 70
3.8 The implementation of the fund utilization plan. 70
IV. Operational Highlights *71*
4.1 Business Activities 71
4.2 Market, Manufacturing & Sales Overview 81
4.3 Human Resources 89
4.4 Information on environmental protection expenditure 89
4.5 Labor Relations 90
4.6 Cybersecurity Management 92
4.7 Important Contracts 95
V. Review of Financial Conditions, Financial Performance, and Risk Management *97*
5.1 Analysis of Financial Status 97
5.2 Analysis of Operation Results 98
5.3 Analysis of Cash Flow 99
5.4 Impact of major capital expenditures in recent years 99
5.5 Investment Policy in the Last Year, Main Causes for Profits or Losses, Improvement Plans and Investment Plans for the Coming Year 99
5.6 Risks of the most recent year and as of the printing date of this annual report 100
VI. Special Disclosure *103*
6.1 Summary of Affiliated Companies 103
6.2 The offering of securities through private placement in the most recent year to the date this report was printed. 104
6.3 Additional Information. 104
6.4 Incidents that caused significant influence on the shareholders' equity or stock price of the Company as stated in Subparagraph3, Paragraph 2 in Article 36 of this law in the most recent year to the date this report was printed. 104
6.5 Major resolutions of the Shareholders Meeting and Board in the most recent year to the date this report was printed. 104
6.6 Scope of Authority, Business Highlights during the Year, and Continuing Education for the Chief Governance Officer 107
6.7 Policies or strategies for managing environmental, social, and corporate governance risks relating to the Company's operations 108
6.8 Continuing education of directors during the fiscal year 110
6.9 Report on the independence and competence of the CPA for the 2025 fiscal year 111

I. Letter to Shareholders

To all shareholders:

2024 Business Report

In 2024, the global economy faces significant challenges due to escalating geopolitical tensions, trade policy adjustments, supply chain restructuring, persistent inflationary pressures, and frequent extreme weather events. These factors collectively impact the stability of economic growth.

Despite the volatile external environment, E Ink's management team and all employees have worked diligently together, achieving the highest annual revenue since focusing on the ePaper business in 2016. In 2024, E Ink's consolidated revenue reached NT$32.163 billion, with an operating margin of 23.7%, profit margin of 27.6%, net income of NT$8.867 billion, and EPS of NT$7.75. Both revenue and net income grew compared to 2023, setting a new second-highest record in the company's history.

We extend our special thanks to our shareholders and board of directors for their trust and support, to all employees for their hard work, and to our ecosystem partners for their strong assistance. This is an important driving force for us to continue moving forward and creating value.

Business and Operations Review

Despite the volatile external environment, E Ink remains steadfast in its commitment to the sustainable development of low-carbon ePaper. The company continues to launch innovative technologies and application products, achieving its core goal of "pursuing profits and sustainability in tandem."

- Consumer Electronics (CE) Applications: Color ePaper technology has been successfully applied to eReaders and eNotes, entering mass production with several global brand customers adopting it. These new products not only achieve a color upgrade but also introduce larger-sized models to meet consumer demands for color presentation and screen size. This has driven a wave of device upgrades, significantly boosting growth in the consumer electronics market.

- IoT Applications: The transition to Electronic Shelf Label (ESL) technology has been successfully completed. Although growth momentum was impacted in the first half of the year due to product transitions and customer inventory adjustments, it gradually stabilized later. The development of Variable Color ePaper (E Ink Prism™) technology has brought diverse and innovative applications to the market. Additionally, large-sized ePaper Signage offers an ultra-low carbon dynamic signage solution that can replace traditional paper posters, attracting significant market attention as a potential application.

Enhancing Eye Health Awareness and Promoting Innovative Applications

A study published by the Harvard School of Public Health on the effects of blue light on the eyes indicates that ePaper devices without front light do not emit blue light, thus causing no pressure on the retina. Compared to TFT-LCD screens, ePaper is three times healthier for the eyes. To raise public awareness of eye health, E Ink launched the "Healthier Screen Time" initiative. This includes creating a website to introduce information about eye health and collaborating with

ophthalmology groups to promote awareness through media platforms. Additionally, ePaper Signage has been implemented in medical institutions and eye clinics, effectively conveying eye health information to the public while leveraging the advantages of ePaper displays to enhance patients' consultation environments.

In terms of innovative applications and technology development, E Ink has received numerous accolades:

- E Ink Spectra 6 Plus color ePaper awarded the 2024 Smart Display Industrial Alliance (SDIA) Award- Silver Award.
- E Ink Spectra™ 6 color ePaper received the Display of the Year Award at SID Display Week 2024.
- E Ink Spectra™ 6 Plus color ePaper display awarded the 2024 Gold Panel Award- Best Product Award.
- The medical care eNote awarded Smart Display Application Awards (SDAA)- Smart Healthcare Award.

Commitment to Sustainable Development and Creating Long-Term Value

E Ink is committed to the core goal of "profit and sustainability being equally important," demonstrating its long-term commitment to shareholders and stakeholders. The company focuses on the research and promotion of ePaper products that are "born for environmental sustainability," while comprehensively considering short-, medium-, and long-term sustainability risks and opportunities in both internal and external environments, conducting thorough planning and governance. E Ink is also dedicated to the well-being of employees and their families, achieving mutual prosperity with value chain partners, and actively giving back to society to fulfill its corporate social responsibility, aiming to play its role as a global citizen in creating a sustainable future.

In the latest Dow Jones Sustainability Index (DJSI), E Ink has been included as a constituent of both the Dow Jones Sustainability World Index (DJSI-World) and the Dow Jones Sustainability Emerging Markets Index (DJSI-Emerging Markets) for the third consecutive year. According to the S&P Global Corporate Sustainability Assessment (CSA) results, E Ink achieved an outstanding score of 92 points, ranking the highest in the global electronic equipment, instruments and components industry index for two consecutive years. This score is a 3-point improvement from 2023, setting a new historical high for the industry. As a result, E Ink is recognized as top 1% of global companies in the 2024 The Sustainability Yearbook.

E Ink is committed to providing energy-efficient and low-carbon ePaper products, with FTSE Russell's green revenue model indicating that 99% of our product sales are classified as green revenue. The credit rating agency, Moody's, has rated E Ink's Sustainability Quality Score as Very Good (SQS2) for its significant contributions to sustainability. Additionally, it confirmed that E Ink's energy-efficient and low-carbon ePaper products comply with the EU Taxonomy, making a substantial contribution to climate change mitigation.

Furthermore, E Ink has achieved leadership level in both Climate Change and Water Security reports by the global environmental disclosure organization CDP. Notably, Climate Change earned the top rating of A List, recognizing E Ink's concrete actions and active engagement in critical environmental issues such as climate governance, carbon management, and water resource management.

To actively respond to global climate change, E Ink set ambitious goals at the end of 2021: to achieve 100% renewable energy (RE100) by 2030 and reach net-zero carbon emissions by 2040. By the end of 2024, E Ink has already achieved RE58, meaning that 58% of its electricity consumption comes from renewable energy, significantly ahead of its original

plan to reach RE30 by 2024.

Outside of Taiwan, all of E Ink's global locations have achieved RE100, utilizing 100% renewable energy. In Hsinchu and Linkou, the adoption rate of renewable energy continues to rise, currently exceeding RE20. With the accelerated adoption of renewable energy, E Ink has raised its target for renewable energy adoption by the end of 2025 to RE65, aiming to achieve RE100 across all global locations as soon as possible.

Due to E Ink's proactive use of renewable energy and implementation of related carbon reduction measures, carbon emissions in 2024 were reduced by 52% compared to scenarios without carbon reduction measures and decreased by 40% compared to the baseline year of 2021.

In waste reduction efforts, E Ink's Yangzhou and the Linkou plants passed UL2799 Zero Waste to Landfill certification at the gold and platinum level in November 2024 and January 2025, respectively. The Hsinchu plant in Taiwan is also expected to obtain platinum level certification in the first quarter of 2025.

E Ink is committed to manufacturing transformation by replacing outdated, energy-consuming equipment and optimizing process parameters while enhancing energy management through the implementation of ISO 50001 Energy Management System. By 2024, energy productivity nearly doubled compared to the baseline year of 2018, maintaining its EP100 commitment.

In terms of green procurement, E Ink passed the ISO 20400 Sustainable Procurement Guidance performance assessment in 2024 and received "Advanced" level certification, showcasing excellence in promoting sustainable procurement and supply chain responsibility.

At the same time, E Ink has also obtained ISO 37001 Anti-Bribery Management System certification, becoming the first company in the display industry to receive this certification. This demonstrates the company's strong commitment to integrity in business operations and sustainable development. Through implementing ISO 37001 Anti-Bribery Management System, E Ink can strengthen internal and external risk management capabilities and auditing mechanisms while enhancing operational efficiency and effectively reducing legal and reputational risks.

In addition, E Ink is dedicated to technological innovation and sustainable practices, receiving numerous accolades:

- Awarded the 6th Presidential Innovation Award, the highest national honor for innovation.
- Ranked on the "Best Taiwan Global Brands" list with a brand value of US$105 million.
- Honored with the CommonWealth Excellence in Corporate Social Responsibility Award, ranking 5th in the manufacturing sector.
- Recognized again with the Global Views Monthly ESG Award.
- Honored with the Taiwan Corporate Sustainability Award (TCSA) for Comprehensive Performance, ranking among Taiwan's Top 10 Sustainable Exemplary Enterprises.
- Achieved five major awards at the Taiwan Corporate Sustainability Awards (TCSA) and made its first appearance in the Global Corporate Sustainability Awards (GCSA).
- Received four Gold Awards at the Taiwan Sustainable Action Awards (TSAA) and Asia-Pacific Sustainable Action Awards (APSAA).

- Achieved five Gold Awards at the Asian Sustainability Reporting Awards (ASRA).
- First awarded AAA rating in the SEED Taiwan Sustainability Evaluation.

In its investment in natural and biological diversity, E Ink has been listed among the first wave of TNFD pioneers in 2024 (or earlier). E Ink is actively committed to disclosing corporate natural risks and strategies and has joined several nature-related initiatives. The first Nature and Climate Report was published in 2024, supporting ecological restoration and promoting environmentally friendly practices.

2025 Business Focus

2025 marks a milestone for E Ink's officially development of large-size ePaper, heralded as the "First Year of Large-Size ePaper." Since its establishment in 1992, E Ink has consistently focused on the research and manufacturing of small-size displays. Now, entering the large-size ePaper domain presents new challenges, including quality standards for new large-size displays, large-scale production criteria, and a complete transformation of market strategy.

Successfully advancing the development of large-size ePaper will significantly enhance E Ink's revenue and profitability, propelling the company toward its goal of becoming a world-class display enterprise. We firmly believe that overcoming these challenges will yield fruitful results, elevating E Ink's operational performance to new heights.

In the medium-size ePaper sector, E Ink will continue to deepen the technological development of eReaders and eNotes, including enhancements in color performance and display speed to meet customer demands. Simultaneously, E Ink will continuously optimize cost competitiveness, aiming for medium-size ePaper to compete with LCDs on cost in the future.

In the electronic shelf labels (ESL) segment, E Ink not only launches higher-quality products but also continually optimizes costs to help retailers reduce the total cost ownership (TCO) for electronic shelf labels (ESL). Through these efforts, we expect to further promote the widespread adoption of electronic shelf labels (ESL) in the global market.

Technology Development

E Ink continues to focus on developing ePaper display technology, vertical integration, and ecosystem partner technologies. In addition to enhancing color display effects, faster page-turning and display speeds, larger sizes, and outdoor applications on ePaper, we are also concentrating on low-energy consumption designs and carbon footprints reduction. Furthermore, we are developing relevant materials for vertically integrated applications of ePaper products and collaborating with ecosystem partners to explore and develop next-generation advanced technologies, accumulating momentum for long-term development.

Operations Management

To accommodate future operational growth, E Ink is continuously expanding capacity and optimizing processes. The new office and factory building in Hsinchu has officially commenced operations, with new production lines focused on capacity for large-size products and related materials. We are committed to enhancing production efficiency for ePaper while ensuring stable quality supply and improving cost competitiveness. Additionally, to deepen and strengthen operational capabilities, the company is continuously refining its foundational management systems towards production automation and intelligence while integrating global resource allocation to drive continuous improvement in operational efficiency and effectiveness.

Outlook

E Ink's ePaper products "born for environmental sustainability" have become a key technology in constructing display interfaces of net-zero city. Regardless of social, economic, or political changes, E Ink is committed to challenging itself to overcome existing and potential difficulties while continuously promoting ePaper technology. We aim to embrace market opportunities, achieve steady growth, and actively give back to society.

Currently, most of the world's largest and highest-valued display companies primarily focus on large-size products with small-size ones as a supplement. E Ink is also striving in this direction by continually expanding its ePaper ecosystem and accelerating applications in reading, education, retail, signage, transportation, logistics, and other fields to create a new sustainable future. We Make Surfaces Smart and Green.

Best regards,

Chairman
Johnson Lee

II. Corporate Governance Report

2.1 Directors and Management Team

2.1.1 Directors and Supervisors

2025/3/30

Title	Nationality /Place of Incorporation	Name	Gender Age	Date Elected	Term (Years)	Date First Elected	Shareholding when Elected		Current Shareholding		Spouse & Minor Shareholding		Shareholding by Nominee Arrangement		Experience and Education	Other Position	Executives, Directors or Supervisors Who are Spouses or within Two Degrees of Kinship			Remarks
							Shares	%	Shares	%	Shares	%	Shares	%			Title	Name	Relation	
Director	ROC	Aidatek Electronics, Inc.	N/A	2023.06.29	3	2014.06.18	240,000	0.02%	240,000	0.02%	0	0.00%	0	0.00%	N/A	None	None	None	None	None
Director	ROC	Johnson Lee Representative of Aidatek Electronics, Inc.	Male Aged 41 to 50	2023.06.29	3	2008.06.13	823,040	0.07%	878,040	0.08%	14,887,000	1.29%	673,000	0.06%	Bachelor of Economics and Electrical Engineering from Tufts University, USA.	Chairman, E Ink Holdings Inc. Chairman/Director, Subsidiaries of EIH Chairman, ICM Communications Inc. Director, Foongtone Technology Co., Ltd. Director, Integrated Solutions Technology Inc. Director, Jixin Investment Co., Ltd. Observer Director, VusionGroup	None	None	None	None
Director	ROC	FY Gan Representative of Aidatek Electronics, Inc.	Male Aged 51 to 60	2023.06.29	3	2017.06.20	580,000	0.05%	839,000	0.07%	500,000	0.04%	0	0.00%	Ph.D. in Electrical Engineering from McGill University, Canada.	General manager, E Ink Holdings Inc. Director/General manager, Subsidiaries of EIH Director, Plastic Logic HK Ltd. Independent Director, PlayNitride Inc.	None	None	None	None
Director	ROC	Shin-Yi Enterprise Co., Ltd.	N/A	2023.06.29	3	2020.06.18	32,842,345	2.87%	32,842,345	2.86%	0	0.00%	0	0.00%	N/A	None	None	None	None	None
Director	ROC	Luke Chen Representative of Shin-Yi Enterprise Co., Ltd.	Male Aged 61 to 70	2023.06.29	3	2019.09.09	286,000	0.02%	454,000	0.04%	69,000	0.01%	0	0.00%	Master of Science in Electrical Engineering and Industrial Engineering from New Mexico State University, USA.	Executive Vice President, E Ink Holdings Inc. Director/Chairman, Subsidiaries of EIH	None	None	None	None
Director	ROC	Sylvia Cheng Representative of Shin-Yi Enterprise Co., Ltd.	Female Aged 61 to 70	2023.06.29	3	2019.09.09	0	0.00%	0	0.00%	0	0.00%	0	0.00%	Accounting Department of Soochow University, Graduate School of Business Administration, National Chengchi University Co-Founder, Ya & Ya Brand Coach & Consultancy	Co-Founder, Ya & Ya Brand Coach & Consultancy	None	None	None	None
Independent Director	ROC	Po-Young Chu	Male Aged 61 to 70	2023.06.29	3	2019.06.18	0	0.00%	0	0.00%	0	0.00%	0	0.00%	Ph.D. from Purdue University, USA/Professor of the Department of Management Science at National Chiao Tung University	Independent Director, Hsin Kuang Steel Co., Ltd. Independent Director, Polytronics Technology Corporation Independent Director, Cheng Shin Rubber Ind. Co., Ltd. Director, Union Winner International Co., Ltd. Chairman, Mid Sun Technology Co., Ltd.	None	None	None	None
Independent Director	ROC	Huey-Jen Su	Female Aged 61 to 70	2023.06.29	3	2023.06.29	0	0.00%	0	0.00%	0	0.00%	0	0.00%	Ph.D. in Environmental Health Sciences from the Harvard T.H. Chan School of Public Health. Distinguished Professor, Department of Environmental and Occupational Health, College of Medicine, National Cheng Kung University	Director, Foundation For The Advancement Of Outstanding Scholarship Director, National Applied Research Laboratories Independent Director, Sinopac Financial Holdings Co., Ltd. Independent Director,Novatek Microelectronics Corporation	None	None	None	None
Independent Director	ROC	Chang-Mou Yang	Male Aged 61 to 70	2023.06.29	3	2023.06.29	0	0.00%	0	0.00%	0	0.00%	0	0.00%	Ph.D., Materials Science and Engineering, Cornell, USA Professor, Department of Materials Science and Engineering, National Tsing Hua University	Independent Director, Shin Foong Specialty And Applied Materials Co., Ltd. Independent Director, Top Union Electronics Corporation	None	None	None	None

2.1.2 Professional qualifications and independence analysis of directors

1. Directors' expertise and independent directors' independence:

2024/12/31

Criteria / Name	Professional Qualifications and Experience (Note 1)	Independence Criteria (Note2)	Numbers of other public companies serving as an independent director.
Aidatek Electronics, Inc. Representative：Johnson Lee	Work experience in commerce, law, finance, and banking, accounting, or necessary for the operation and management of company business.		0
Aidatek Electronics, Inc. Representative：FY Gan	Work experience in commerce, law, finance, and banking, accounting, or necessary for the operation and management of company business.		1
Shin-Yi Enterprise Co., Ltd. Representative：Luke Chen	Work experience in commerce, law, finance, and banking, accounting, or necessary for the operation and management of company business.		0
Shin-Yi Enterprise Co., Ltd. Representative：Sylvia Cheng	Work experience in commerce, law, finance, and banking, accounting, or necessary for the operation and management of company business.		0
Independent Director Po-Young Chu	Experience as a lecturer (or above) in commerce, law, finance, accounting, or any subjects relevant to the operation and management of business at public or private tertiary institutions.	(1) Having complied with the independence criteria: Article 3 of Regulations Governing Appointment of Independent Directors and Compliance Matters for Public Companies. (2) A statement of conformity with professional eligibility, independence, and concurrent duties for independent director was signed when elected.	3
Independent Director Huey-Jen Su	Experience as a lecturer (or above) in commerce, law, finance, accounting, or any subjects relevant to the operation and management of business at public or private tertiary institutions.	(1) Having complied with the independence criteria: Article 3 of Regulations Governing Appointment of Independent Directors and Compliance Matters for Public Companies. (2) A statement of conformity with professional eligibility, independence, and concurrent duties for independent director was signed when elected.	2
Independent Director Chang-Mou Yang	Experience as a lecturer (or above) in commerce, law, finance, accounting, or any subjects relevant to the operation and management of business at public or private tertiary institutions.	(1) Having complied with the independence criteria: Article 3 of Regulations Governing Appointment of Independent Directors and Compliance Matters for Public Companies. (2) A statement of conformity with professional eligibility, independence, and concurrent duties for independent director was signed when elected.	2

Note 1: For the educational background and experience of the company's directors, please refer to Section 2.1.1. None of the company's directors have any circumstances described in Article 30 of the Company Act.

Note 2: Independent directors must disclose situations that demonstrate their independence, including but not limited to whether they, their spouses, or relatives within two degrees of kinship serve as directors, supervisors, or employees of the company or its affiliated enterprises; the number and proportion of shares held by them, their spouses, or relatives within two degrees of kinship (or using other people's names); whether they serve as directors, supervisors, or employees of companies with specific relationships to the company (refer to the Regulations on the Establishment and Compliance of Independent Directors of Publicly Issued Companies, Article 3, Paragraph 1, Items 5-8); and the amount of compensation received for providing business, legal, financial, or accounting services to the company or its affiliated enterprises over the past two years.

2. Diversity and independence of the board of directors:

(1) Board diversity: Describe diversity policy and goals for the board of directors, and the goal achievement. Diversity

policy includes not only the director selection criteria, but also the level of professional quality and experience. The board possesses, as a whole, gender/age/nationality/and culture background. The following provides the E Ink's goals of BOD and achievement with the term. If the number of directors of any gender on the board of a listed or OTC-listed company does not reach one-third, reasons for this situation should be provided, along with plans to enhance gender diversity among directors.

A. Board Diversity Policy and Goals

E Ink has established a diversity policy for its board of directors, in accordance with the "Corporate Governance Guidelines." The composition of the board considers diversity, ensuring that no more than one-third of the directors hold concurrent management positions within the company. To meet the unique demands of being a leader in e-paper technology and sales, at least one director must have a professional background in diverse fields such as finance, investment, chemical engineering, sustainability and environmental protection, business management, and marketing. Other directors and independent directors should have backgrounds that include materials research, manufacturing management, and technology R&D, aligning with the needs of display technology, electronic products, electronic materials, and chemical manufacturing. Additionally, the board aims to cover a range of ages, from older to middle-aged to younger, to achieve age diversity. Our company also leverages the practical experience of directors who have held senior executive roles in multinational corporations or are experts in their fields, utilizing their insights from industry, government, academia, and research to lead collective growth. This approach enables the company to maintain its forward-looking status while implementing a multi-faceted approach to board diversification.

Board Diversity Policy and Goals		
Short-Term Goals (2024) (Current Stage)	**Mid-Term Goals (2025)**	**Long-Term Goals (2030)**
1. Target of 40% independent directors 2. Increase female directors to 29% 3. Other board diversity management goals as stated above	1. Target of 40% independent directors 2. Increase female directors to 29% 3. Other board diversity management goals as stated above 4. The 12th Board of Directors was re-elected on June 29, 2023, achieving the first and second mid-term goals ahead of schedule.	1. Target of 50% independent directors 2. Increase female directors to 40% 3. Other board diversity management goals as stated above

B. Progress on diversity: Composition, percentage, and term of service of board members have conformed with the diversity policy and goals

E Ink “Directors Election Policy” explicitly state that the election of directors is to use the nomination system. The qualifications of candidates are to be assessed in accordance with the “Corporate Governance Best Practice Principles” as well. The directors will ultimately be elected by the shareholders’ meeting from the list of candidates. The 7 existing members of the Board were elected by the shareholders’ meeting in 2023. These included 3 independent directors and 2 female directors. The average age is 62 years old. Directors serve a statutory term of 3 years. The current term runs from June 29, 2023, through to June 28, 2026. Elections for the full board will therefore be held once their term expires in 2026.

Progress of the 12th Board	The status of achieving diversity policies and goals expected by 2030.
The 12th Board of Directors of the Company consists of seven seats, including three independent directors, representing 43% of the board. There are two female directors, accounting for 29% of the board. All directors possess extensive experience and expertise in their respective fields (please refer to the following description of the board members' diverse backgrounds). The average tenure of all directors is 5.6 years, and none of the independent directors have served for more than three consecutive terms.	1.Independent directors make up 50% of the board. 2.Increase the ratio of female board directors to 40%. 3.It is anticipated to achieve the company's set diversity management goals in stages.
→The goals for the current phase of the diversity policy set by the Company have been achieved.	→The 2025 mid-term targets have been achieved ahead of schedule.

C. The implementation status of board members' diversity

Title	Name	Gender	Term of Independent Director (year)			Age range				Concurrently serving as managers of the company	Number of other public companies serving as an independent director.	Responsibilities of Functional Committees in Oversight and Governance
			<3	3-9	>9	<50	50-60	60-70	>70			
Chairman	Johnson Lee	Male				V				V	0	Convener of the Sustainable Development Committee. Governance related to risk management, information security, and nature.
Director	FY Gan	Male					V			V	1	Governance related to climate change, human rights, occupational safety and health, and sustainable supply chains.
Director	Luke Chen	Male						V		V	0	
Director	Sylvia Cheng	Female						V			0	
Independent Director	Po-Young Chu	Male		V				V			3	Convener of the Audit Committee
Independent Director	Huey-Jen Su	Female	V					V			2	Convener of the Remuneration Committee
Independent Director	Chang-Mou Yang	Male	V					V			2	

Note: Please refer to Section 3.2.1 for information regarding the academic backgrounds and career experiences of the directors.

D. Board of Directors Diversity and Background

Director Sylvia Cheng	Director Cheng, a Taiwanese veteran in advertising and marketing, is currently a co-founder of Ya & Ya Brand Coach & Consultancy. With approximately 30 years of experience in the field of advertising and communication, she has held positions such as Chief Operating Officer at Leo Burnett, General Manager at School Creative, General Manager of Digital Integration at Praise, Managing Director at Yangshi Advertising, and Managing Director at Ogilvy & Mather Promotions. She possesses expertise in finance and accounting, having served as the Chief Financial Officer for Northeast Asia at JWT before transitioning to lead the company's management as General Manager. With over two decades of comprehensive and rich experience in brand communication and marketing, she has achieved outstanding results for numerous well-known companies in both brand and product aspects, earning numerous domestic and international creative awards through collaborative efforts. She specializes in brand strategy and marketing planning, with involvement in media, public relations, and digital communities. Through digital networks such as the internet and

	broadband, as well as traditional media, she designs content with brand significance and business impact, including advertising, entertainment, and community engagement. Leveraging her extensive and diverse background in the industry, her contributions have been instrumental in enhancing the exposure of E Ink's brand and products through marketing channels.
Independent Director Po-Young Chu	Independent Director Chu has previously served as an independent director for listed technology companies in Taiwan and as a senior consultant for organizations such as the Chung-Hua Institution for Economic Research, Industrial Technology Research Institute, and Futures Exchange Promotion Committee. With expertise in both business and financial management, he provides timely guidance to E Ink Holdings in financial decision-making. Belonging to the professional services human resource and employment services research and consulting services sector, he offers professional knowledge advisory services to assist E Ink in professional business management strategies.
Independent Director Huey-Jen Su	Independent Director Su is a Ph.D. in Environmental Health Sciences from Harvard University. She has previously served as the President of National Cheng Kung University and currently holds the position of Professor at the Institute of Environmental Medicine, School of Medicine. Dr. Su specializes in public health and higher education leadership, with research interests including environmental quality and health effects. She has also delved into Health Care Technology, contributing her expertise to guide E Ink Holdings in promoting eye care features in their products, thus enhancing their health benefits. Dr. Su has been actively involved in various domestic and international high-level sustainable development committees for many years, focusing on climate change and sustainable development. With her extensive experience and achievements in sustainable development practices, management, and education, deeply connected to localities and industries, Dr. Su will provide diverse perspectives on issues such as deepening ESG, digital applications, product innovation, and sustainable practices for E Ink Holdings. Her involvement is expected to play a more proactive role in fostering collaboration within E Ink.
Independent Director Chang-Mou Yang	Independent Director Yang holds a Ph.D. in Materials Science and Engineering from Cornell University in the United States. He previously served as a researcher at the IBM Research Center in San Jose, California (Almaden Research Center), and also served as the principal investigator for projects funded by the Ministry of Economic Affairs, the National Science Council, and the U.S. Air Force Laboratory. Additionally, he served as the chairman of the Supervisory Committee at Tsinghua University. Currently, he is a professor in the Department of Materials Science and Engineering at Tsinghua University, specializing in the field of materials science. With expertise in Technology Hardware & Equipment Communications Equipment, he possesses a professional background in applied materials science and specializes in the research and development and mass production of specialty polymers, optoelectronic materials, semiconductor processes, and high-precision color display technologies. With his guidance, E Ink will receive comprehensive supervision and direction, leading the company to new heights.

E. If the number of directors of any gender on the board of a listed or OTC-listed company does not reach one-third, reasons for this situation should be provided, along with plans to enhance gender diversity among directors.

Our company currently has a board of seven directors, with two female directors (29%), which does not meet the requirement of having at least one-third of directors from either gender. The female director ratio is 29%, occupying two seats. Since the current board took office in 2023, we have gradually implemented policies to promote gender diversity. As the current board's term will expire in 2026, we will conduct elections for the new board. The next board will aim to enhance gender diversity, actively planning and taking concrete measures to increase the proportion of female directors, moving towards medium- and long-term goals. Our company will continue to focus on diversity planning, promote gender structure diversity, ensure compliance with relevant regulations, and strengthen corporate governance.

(2) Board independence: provide explanations on the number and percentage of independent directors, board performance, and whether the board exhibits any of the conditions described in Paragraphs 3 and 4, Article 26-3 of the Securities and Exchange Act with reasons; please also highlight any relationship characterized as spouse or 2nd-degree relative or closer among directors, among supervisors, and between directors and supervisors.

The current 12th Board of Directors of the company was elected by shareholder vote on June 29, 2023, comprising a total of 7 directors, including 3 independent directors, accounting for 43% of all director seats. There are a total of 2 female directors, accounting for 29% of the seats. All directors possess rich experience and expertise in relevant fields. The current term of office for directors is three years, from June 29, 2023, to June 28, 2026, and reelection will take place in 2026.

The independent directors of the company, appointed on June 29, 2023, have all signed declarations confirming their qualifications, independence, and compliance with part-time regulations as independent directors. The Board of Directors and its members comply with the independence requirements stipulated by regulations, and there are no violations of Article 26-3, paragraphs 3 and 4 of the Securities and Exchange Act. For information regarding familial relationships among directors, please refer to Section 2.1.1 Director’s Information.

2.1.3 Major shareholders of the institutional shareholders

Major shareholders of the institutional shareholders

2024/12/31

Name of Institutional Shareholders	Major Shareholders	%
Shin-Yi Enterprise Co., Ltd.	S.C. Ho	27.84%
	Jucheng Investment & Management Co., Ltd.	12.50%
	BRILLIANT PRIDE LIMITED	12.50%
	Gao Da Global Ltd.	12.50%
	Mei Yu Ho	12.50%
	Guang Yu Investment Co., Ltd.	5.91%
	Tsai Hui Shin Ho	2.48%
	Richard Ho	2.18%
	Jin Jie Investment Co., Ltd.	1.52%
	Hoss Foundation	1.48%
Aidatek Electronics, Inc.	Hsinex International Corporation	47.69%
	S.C. Ho	41.27%
	Felix Ho	7.46%
	Johnson Lee	3.58%

Major shareholders of the Company's major institutional shareholders

2024/12/31

Name of Institutional Shareholders	Major Shareholders	%
Jucheng Investment & Management Co., Ltd.	Rainbow Time Ltd. (Samoa)	100.00%
BRILLIANT PRIDE LIMITED	LEE SWEE HIONG	100.00%
Gao Da Global Ltd.	Jin-Xing Lin	100.00%
Guang Yu Investment Co., Ltd.	Tsai Hui Shin Ho	57.49%
	Jie-Ru Ho	7.50%
	Wen-Hua Ho	7.50%
	Yi-Jin Huang	6.25%
	Yi-Xuan Huang	6.25%
	Jie-Xi Liu	3.75%
	Jie-Ya Liu	3.75%
	Jie-Xiu Ka	3.75%
	Jie-Ke Ka	3.75%
	Richard Ho	0.01%
Jin Jie Investment Co., Ltd.	Guang Yu Investment Co., Ltd.	100.00%
Hoss Foundation	Founded in 2001 with Hui-Mei Chen as the main donor at the time of founding	100.00%
Hsinex International Corporation	S.C. Ho	27.13%
	C. J. Chang	26.00%
	Yi Chia Ho	24.48%
	Felix Ho	22.28%
	Cheng Yu Co., Ltd.	0.11%

2.1.4 Management Team

2025/03/30

Title (Note 1)	Nationality / Place of Incorporation	Name	Gender	Date Elected (Note 2)	Shareholding		Spouse & Minor Shareholding		Shareholding by Nominee Arrangement		Experience and Education (Note 3)	Currently holding positions at other companies.	Managers who have spouses or relatives within two degrees of kinship.			Remarks (Note 4)
					Shares	%	Shares	%	Shares	%			Title	Name	Relation	
President	Republic of China	FY Gan	Male	2017.06.20	839,000	0.07%	500,000	0.04%	0	0.00%	Associate Vice President at AUO Corporation / PhD in Electrical Engineering from McGill University, Canada	Director/General Manager of the Company's Subsidiary Director of PLASTIC LOGIC HK LIMITED Independent Director of PlayNitride Inc.	None	None	None	None
Executive Vice President, Operations Center	Republic of China	Luke Chen	Male	2010.10.01	454,000	0.04%	69,000	0.01%	0	0.00%	Executive VP at Ningbo Chihsin Optoelectronics Corporation, Executive VP at Topsun Optronic, Inc., Director at Quanta Display Inc., LCM Engineering Department, Assistant manager at Chi Mei Optoelectronics Corporation, LCM Engineering Department, PhD in Electrical Engineering from Penn State University	Director/Chairman of the Company's Subsidiary	None	None	None	None
Chief Financial Officer, Financial Control Center	Republic of China	Lloyd Chen	Male	2018.04.23	162,950	0.01%	0	0.00%	0	0.00%	AVP at TPV Technology Co., Ltd., CFO of Global Display Solutions Asia, Manager at Lite-On Technology, Supervisor at Deloitte & Touche Accounting Firm, Bachelor's from CUNY, Macquarie University	Director of the Company's Subsidiary CFO of the Company's Subsidiary	None	None	None	None
Chief Technology Officer, R&D Center (Taiwan)	United Kingdom	Ian Douglas French	Male	2012.03.01	230,000	0.02%	0	0.00%	0	0.00%	Principal Researcher at Philips, Senior Research Scientist at GEC, Research Assistant at Dundee University, Research Scientist at GEC, Master's in Physics and Technology of Amorphous Silicon from Dundee	None	None	None	None	None
Vice President, Business Center	Republic of China	JM Hung	Male	2018.09.06	278,000	0.02%	176,000	0.02%	0	0.00%	Supervisor at AUO Corporation, Master's in Electrical and Control Engineering from National Chiao Tung University	Director of the Company's Subsidiary Director of Integrated Solutions Technology Inc.	None	None	None	None
Vice President, General Manager's Office	Republic of China	Tung-Liang Lin	Male	1995.05.25	57,983	0.01%	0	0.00%	0	0.00%	Engineer at ITRI, Master's in Electronic from National Chiao Tung University	None	None	None	None	None
Senior Vice President, Advanced Technology Research Center	Republic of China	YS Chang	Male	1996.02.01	212,000	0.02%	0	0.00%	0	0.00%	Engineer at ITRI, Master's in Photonics from National Chiao Tung University	None	None	None	None	None
Vice President, FPL Production Division	Republic of China	Mano Lo	Male	2013.12.09	271,000	0.02%	0	0.00%	0	0.00%	Executive Vice President at Optimax Technology Corporation , Executive VP at Achem Opto-	Director of the Company's Subsidiary	None	None	None	None

Title (Note 1)	Nationality / Place of Incorporation	Name	Gender	Date Elected (Note 2)	Shareholding		Spouse & Minor Shareholding		Shareholding by Nominee Arrangement		Experience and Education (Note 3)	Currently holding positions at other companies.	Managers who have spouses or relatives within two degrees of kinship.			Remarks (Note 4)
					Shares	%	Shares	%	Shares	%			Title	Name	Relation	
											electronic Corporation America, GM at RITEK CEO office, Prorit Corporation, Associate Vice President at Media Manufacturing Business Group, RITEK Corporation, Senior Manager at AT&T Lucent SIC, Master's in Technology Management from National Chiao Tung University					
Senior Associate Vice President, Lin Kou R&D Division	Republic of China	Jason Jan	Male	2020.07.01	62,000	0.01%	0	0.00%	0	0.00%	R&D Specialist at RITEK Corporation, PhD in Chemistry from National Tsing Hua University	Director of Asia Electronic Materials Co., Ltd.	None	None	None	None
Associate Vice President, eNote BU	Republic of China	Jim Chang	Male	2018.09.06	230,000	0.02%	108,000	0.01%	0	0.00%	Marketing Director at AUO Corporation, Product Engineer at Picvue Electronics Ltd., Master's in Nuclear Science from National Tsing Hua University	Director of the Company's Subsidiary	None	None	None	None
Associate Vice President, IoT BU	Republic of China	Max Chen	Male	2013.02.01	222,000	0.02%	20,000	0.00%	0	0.00%	Plant Director at AUO Corporation, Process Engineer at Picvue Electronics Ltd., Master's in Chemistry from National Cheng Kung University	None	None	None	None	None
Associate Vice President, Retail BU	Republic of China	Jason Chiang	Male	2023.07.10	193,000	0.02%	0	0.00%	0	0.00%	Sales Manager at Walsin Lihwa Corporation, Manager at Coretronic Corporation, Deputy Director at Young Lighting Technology Inc., Master's in Business Administration from National Chung Cheng University	None	None	None	None	None
Associate Vice President, FPL Production Division	Republic of China	Peter Peng	Male	2021.07.21	39,000	0.00%	0	0.00%	0	0.00%	Manager at AUO Corporation, Process Engineer at E Ink, Master's in Polymer Science from Feng Chia University	None	None	None	None	None
Associate Vice President, Information Department	Republic of China	James Huang	Male	2022.07.01	43,000	0.00%	0	0.00%	0	0.00%	Senior Manager at Synergy Circulation Technology Co., Ltd., Manager at Century Technology (Shenzhen) Co., Ltd., Group Manager at TPO Displays Corp., Bachelor's in Information Engineering from Feng Chia University	None	None	None	None	None
Associate Vice President, Supply Chain Division	Republic of China	Abraham Lin	Male	2023.07.10	99,000	0.01%	0	0.00%	0	0.00%	Manager at Corning Display Technologies Taiwan Co., Ltd., Associate at Da Hong Co., Ltd., Director at Acer Incorporated, Executive VP at Shun On Electronics Co., Ltd., GM at Uni-Pixel, Inc. (USA) Taiwan Branch, GM at Wah Hong Industrial Corp. , Seton Hall University EMBA Master	Associate of the Company's Subsidiary	None	None	None	None
Associate Vice President, eReader BU	Republic of China	David Liu	Male	2024.07.01	60,000	0.01%	0	0.00%	0	0.00%	Director at AUO, Director at Flytech Technology, Director at iRuggy Systems Corporate Ltd.,	None	None	None	None	None

Title (Note 1)	Nationality / Place of Incorporation	Name	Gender	Date Elected (Note 2)	Shareholding		Spouse & Minor Shareholding		Shareholding by Nominee Arrangement		Experience and Education (Note 3)	Currently holding positions at other companies.	Managers who have spouses or relatives within two degrees of kinship.			Remarks (Note 4)
					Shares	%	Shares	%	Shares	%			Title	Name	Relation	
											Master's in Business Administration from Thunderbird School of Global Management					
Acting Accounting Supervisor, Financial Control Center	Republic of China	Patrick Chang	Male	2025.02.22	100,800	0.01%	35,000	0.00%	0	0.00%	Supervisor at Deloitte & Touche Accounting Firm, Manager at China Development Financial Holding Group (AMC), Consultant at Anvil Asia Partner (HK), Manager at Far Eastern Bank, Manager at YFY Investment Holdings, Manager at YFY Paragon Investment, Bachelor's degree, Department of finance, National Sun Yat-sen University	Director/Supervisor of the Company's Subsidiary	None	None	None	None

Note 1: It should include information on the general manager, deputy general manager, assistant manager, heads of various departments and branches, as well as those whose positions are equivalent to general manager, deputy general manager or assistant manager, regardless of the title, should also be disclosed.
Note 2: This date is the date of promotion to the management level.
Note 3: The experience related to the current position, if you have worked in the audit and visa accounting firm or related companies during the previous disclosure period, the title and responsible position should be stated.
Note 4: When the general manager or equivalent (top manager) and the chairman are the same person, spouse or first-degree relative, the reasons, rationality, necessity and countermeasures should be disclosed (such as increasing the number of independent directors, And there should be more than half of the directors do not serve as employees or managers, etc.) related information): no such situation.
Note 5: David Liu was promoted to Associate Vice President on July 1, 2024.
Note 6: Patrick Chang was appointed Acting Accounting Supervisor by resolution of the Board of Directors effective February 22, 2025. Jimmy Lee, the former Accounting Officer, was reassigned as Head of Audit on the same date.

2.1.5 Remuneration of Directors, Independent Directors, President, and Vice President

(1) Remuneration of Directors and Independent Directors

Unit: NT$ thousands

Title	Name	Remuneration								Ratio of Total Remuneration (A+B+C+D) to Net Income (%)		Relevant Remuneration Received by Directors Who are Also Employees								Ratio of Total Compensation (A+B+C+D+E+F+G) to Net Income (%)		Remuneration from ventures other than subsidiaries or from the parent company
		Base Compensation (A)		Severance Pay (B)		Directors Compensation (C)		Allowances (D)				Salary, Bonuses, and Allowances (E)		Severance Pay (F)		Employee Compensation (G)						
		The company	Companies in the consolidated financial statements	The company	Companies in the consolidated financial statements	The company	Companies in the consolidated financial statements	The company	Companies in the consolidated financial statements	The company	Companies in the consolidated financial statements	The company	Companies in the consolidated financial statements	The company	Companies in the consolidated financial statements	The company: Cash	The company: Stock	Companies in the consolidated financial statements: Cash	Companies in the consolidated financial statements: Stock	The company	Companies in the consolidated financial statements	
Director	Aidatek Electronics, Inc. Representative: Johnson Lee Aidatek Electronics, Inc. Representative: FY Gan Shin-Yi Enterprise Co., Ltd. Representative: Luke Chen Shin-Yi Enterprise Co., Ltd. Representative: Sylvia Cheng	0	0	0	0	25,000	25,000	963	963	25,963 0.29%	25,963 0.29%	87,108	98,934	216	216	2,771	0	2,771	0	116,058 1.31%	127,884 1.44%	5
Independent Director	Po-Young Chu Huey-Jen Su Chang-Mou Yang	0	0	0	0	15,000	15,000	764	764	15,764 0.18%	15,764 0.18%	0	0	0	0	0	0	0	0	15,764 0.18%	15,764 0.18%	0

Note 1: The amount includes vehicle rental expenses of approximately NT$2,053 thousand and driver-related compensation of approximately NT$1,870 thousand.
Note 2: The total remuneration allocated to directors for the year 2024 (113th fiscal year) is NT$40,000 thousand, and the total remuneration allocated to employees is NT$103,000 thousand. This allocation was approved by the Board of Directors on February 21, 2025 (114.02.21) and will be distributed upon approval by the shareholders' meeting.

(1) According to Article 19 of the company's bylaws: Remuneration for Directors shall be disbursed in cash. Employee remuneration may be disbursed in either cash or stock. Employees of subsidiaries meeting specific criteria are entitled for remuneration. Such criteria shall be determined by the Board under appropriate authorization.
(2) In addition to the above remuneration, director remuneration shall be disclosed as follows when received from companies included in the consolidated financial statements in the most recent year to compensate directors for their services: None.

Range of Remuneration

Range of Remuneration	Name of Directors			
	Total of (A+B+C+D)		Total of (A+B+C+D+E+F+G)	
	The company	Companies in the consolidated financial statements	The company	The company and all its affiliated investments
Less than NT$ 1,000,000				
NT$1,000,000 ~ NT$1,999,999				
NT$2,000,000 ~ NT$3,499,999				
NT$3,500,000 ~ NT$4,999,999				
NT$5,000,000 ~ NT$9,999,999	Huey-Jen Su、Chang-Mou Yang、Po-Young Chu、	Huey-Jen Su、Chang-Mou Yang、Po-Young Chu、	Huey-Jen Su、Chang-Mou Yang、Po-Young Chu、Sylvia Cheng(Shin-Yi)	Huey-Jen Su、Chang-Mou Yang、Po-Young Chu、Sylvia Cheng(Shin-Yi)

Range of Remuneration	Name of Directors			
	Total of (A+B+C+D)		Total of (A+B+C+D+E+F+G)	
	The company	Companies in the consolidated financial statements	The company	The company and all its affiliated investments
	Sylvia Cheng(Shin-Yi)、Luke Chen(Shin-Yi)、FY Gan(Aidatek)	Sylvia Cheng(Shin-Yi)、Luke Chen(Shin-Yi)、FY Gan(Aidatek)		
NT$10,000,000 ~ NT$14,999,999	Johnson Lee (Aidatek)	Johnson Lee (Aidatek)		
NT$15,000,000 ~ NT$29,999,999			Luke Chen (Shin-Yi)	Luke Chen (Shin-Yi)
NT$30,000,000 ~ NT$49,999,999			FY Gan(Aidatek)	FY Gan(Aidatek)
NT$50,000,000 ~ NT$99,999,999			Johnson Lee (Aidatek)	Johnson Lee (Aidatek)
Greater than or equal to NT$100,000,000				
Total	7	7	7	7

2. Remuneration of the President and Vice President

Unit: NT$ thousands

Title	Name	Salary (A)		Severance Pay (B)		Bonuses and Allowances (C)		Employee Compensation (D)				Ratio of total compensation (A+B+C+D) to net income (%)		Remuneration from ventures other than subsidiaries or from the parent company
		The company	Companies in the consolidated financial statements	The company	Companies in the consolidated financial statements	The company	Companies in the consolidated financial statements	The company		Companies in the consolidated financial statements		The company	Companies in the consolidated financial statements	
								Cash	Stock	Cash	Stock			
Chairman	Johnson Lee	41,349	60,238	864	941	91,333	91,333	5,951	-	5,951	-	139,497 1.57%	158,463 1.79%	10
President	FY Gan													
Chief Technology Officer	Ian Douglas French													
Executive Vice President	Luke Chen													
Chief Financial Officer	Lloyd Chen													
Senior Vice President	YS Chang													
Vice President	Tung-Liang Lin													
Vice President	JM Hung													
Vice President	Mano Lo													

Note 1: The amount includes vehicle rental expenses of approximately NT$2,053 thousand and driver-related compensation of approximately NT$1,870 thousand.

Note 2: The total remuneration allocated to directors for the year 2024 (113th fiscal year) is NT$40,000 thousand, and the total remuneration allocated to employees is NT$103,000 thousand. This allocation was approved by the Board of Directors on February 21, 2025 (114.02.21) and will be distributed upon approval by the shareholders' meeting.

Range of Remuneration

Range of Remuneration	Name of President and Vice Presidents	
	The company	The company and all its affiliated investments
Less than NT$ 1,000,000		
NT$1,000,000 ~ NT$1,999,999		
NT$2,000,000 ~ NT$3,499,999		
NT$3,500,000 ~ NT$4,999,999		
NT$5,000,000 ~ NT$9,999,999	Ian Douglas French、YS Chang、Tung-Liang Lin、Lloyd Chen、Mano Lo	Ian Douglas French、YS Chang、Tung-Liang Lin、Mano Lo
NT$10,000,000 ~ NT$14,999,999	JM Hung	JM Hung、Lloyd Chen
NT$15,000,000 ~ NT$29,999,999	Luke Chen	Luke Chen
NT$30,000,000 ~ NT$49,999,999	FY Gan	FY Gan
NT$50,000,000 ~ NT$99,999,999	Johnson Lee	Johnson Lee
Greater than or equal to NT$100,000,000		
Total	9	9

3. Allocation status of employee compensation assigned to managers

2024/12/31 Unit: NT$ thousands

Title	Name	Employee Compensation in Stock (Fair Market Value)	Employee Compensation in Cash	Total	Ratio of Total Amount to Net Income (%)
Chairman	Johnson Lee	-	8,895	8,895	0.10%
President	FY Gan				
Executive Vice President	Luke Chen				
Senior Vice President	YS Chang				
Vice President	Tung-Liang Lin				
Chief Technology Officer	Ian Douglas French				
Associate Vice President	Max Chen				
Vice President	Mano Lo				
Vice President	JM Hung				
Associate Vice President	Jim Chang				
Senior Associate Vice President	Jason Jan				
Associate Vice President	Peter Peng				
Chief Financial Officer	Lloyd Chen				
Associate Vice President	James Huang				
Associate Vice President	Abraham Lin				
Associate Vice President	Jason Chiang				
Associate Vice President	David Liu				
Accounting Director	Jimmy Lee				

Note 1: Managers in office for the company at the end of 2024.
Note 2: The total director remuneration distribution amount for the fiscal year 2024 is NT$40,000 thousand, and the total employee compensation distribution amount is NT$103,000 thousand. These amounts were approved by the board of directors on February 21, 2025, and will be distributed after approval at the shareholders' meeting.

2.1.6 The analysis of the total remuneration paid to the directors, general manager, and deputy general manager of this company and its consolidated subsidiaries in the past two fiscal years as a percentage of the post-tax net profit reported in the individual financial statements, along with an explanation of the remuneration policy, standards, and composition, the procedures for setting remuneration, and their correlation with business performance and future risks.

1. The ratio of total remuneration paid by the Company and by all companies included in the consolidated financial statements for the two most recent fiscal years to directors, president and vice presidents of the Company, to the net income.

Payee	The ratio of total payment to net income (%)			
	2023		2024	
	The Company	Companies in the consolidated financial statements	The Company	Companies in the consolidated financial statements
Directors	1.56%	1.64%	1.31%	1.44%
Independent Directors	0.16%	0.16%	0.18%	0.18%
President and Vice Presidents	1.90%	2.06%	1.57%	1.79%

2. The policies, standards, and portfolios for the payment of remuneration, the procedures for determining remuneration, and the correlation with risks and business performance.

If the Company has gained profits in the fiscal year, it shall allocate at least 1% of the profits as employee remuneration and allocate no more than 1% of the profits as director remuneration. However, in case of the accumulated losses, certain profits shall first be reserved to cover them.

Remuneration for Directors shall be disbursed in cash. Employee remuneration may be disbursed in either cash or stock. Employees of subsidiaries meeting specific criteria are entitled for remuneration. Such criteria shall be determined by the Board under appropriate authorization. The ratio of remuneration to the Directors, the ratio of remunerations to employees and the method of payment shall be determined by the Board in a session with the presence of at least two-thirds of the Directors and a simple majority of the Directors in session, and reported to the Shareholders Meeting.

The Chairman, President, and Executive Vice Presidents (senior executives) remuneration is positively correlated with the company's operating performance. In addition to "Guaranteed Compensation," "Variable Compensation" is applied, such as employee remuneration, short-term and long-term retention bonuses, etc. These are the main components of senior executive compensation proposals and are highly linked to performance indicators, including financial, sustainability, and strategic performance results. Based on the achievement of these indicators and other management-related considerations, the compensation committee will discuss and deliberate before submitting the proposal to the board of directors for approval.

For 2024, more than 60% of senior executives' total compensation is variable. Of this, more than 30% of the variable compensation will be issued in the form of deferred bonuses, to be distributed over the next 1-2 years.

To fulfill the company’s sustainability commitments and implement key sustainability management actions, the variable compensation of the Chairman, President, and senior managers will be linked to sustainability performance indicators. Weighting factors will be set to encourage senior executives to achieve the company’s short, medium, and long-term goals.

- **Fixed Compensation:** Determined based on the position held, scope of responsibilities, and contribution to the company's operational goals, while also considering the company's annual performance, future risks, and industry standards for similar positions.
- **Variable Compensation:**

(1) **Financial Indicators (60%):** Revenue, operating profit, earnings per share (EPS), return on equity (ROE), and total shareholder return (TSR).

(2) **Sustainability Indicators (20%):**
- Practices for achieving sustainable development, including green manufacturing, net-zero commitments, renewable energy use (RE100), and reducing greenhouse gas emission intensity (10%).
- Inclusion in the Dow Jones Sustainability Index (DJSI), corporate governance, risk management, information security management, and implementing sustainability KPIs across units (10%).

(3) **Strategic Indicators (20%):**
- Development of sustainable e-paper products, focusing on environmental and visually friendly goals.
- Connecting with ecosystem partners to initiate community investments and business initiatives.

2.2 Corporate governance

2.2.1 Board of Directors' Operations

(1) The board convened 5 meetings in the fiscal year 2024 (A), and the attendance of directors is as follows:

Title	Name	Actual Attendance (B)	Proxy Attendance	Actual Attendance Rate (%) [B/A] (Note)	Remarks
Director	Johnson Lee, Representative of Aidatek Electronics, Inc.	5	0	100%	-
Director	FY Gan, Representative of Aidatek Electronics, Inc.	5	0	100%	-
Director	Luke Chen, Representative of Hsin Yi Enterprise Corp.	5	0	100%	-
Director	Sylvia Cheng, Representative of Hsin Yi Enterprise Corp.	5	0	100%	-
Independent Director	Po-Young Chu	5	0	100%	-
Independent Director	Huey-Jen Su	5	0	100%	-
Independent Director	Chang-Mou Yang	5	0	100%	-

Note: Calculated based on the number of board meetings held during the term of office and the actual attendance count.

Other mandatory disclosures:

I. For board of directors' meetings that meet any of the following descriptions, state the date, session, the discussed topics, independent directors' opinions and how the Company has responded to such opinions.

(I) Conditions described in Article 14-3 of the Securities and Exchange Act.

Board Meeting Date	Session	Motion	Opposing Opinions of Independent Directors	Company's response to independent directors' opposing opinions
2024.02.23	12th term, 5th meeting	1. Report on the Minutes and Implementation Status of the Fourth Meeting of the Twelfth Board of Directors 2. Report on the Minutes of the Fourth Meeting of the Fourth Audit Committee 3. Report on the Minutes of the Third Meeting of the Fifth Compensation Committee 4. Report on the 2023 Business Report and Financial Statements 5. Report on the First Quarter Business Situation for 2024 6. Report on Derivative Financial Instrument Transactions of the Company and Its Subsidiaries for December 2023 and January 2024 7. Report on the Status of Funds Lent and Guaranteed by the Company and Its Subsidiaries as of January 31, 2024 8. Report on the Implementation of the Audit Plan for October to December 2023 9. Report on the Performance Evaluation Results for the Board of Directors, Directors, and Various Functional Committees for 2023 10. Report on Indirect Investments in Mainland China through Third-Party Investment Ventures 11. Preparation of the Financial Statements for 2023 12. Proposal for Profit Distribution for 2023 13. Proposal for Employee Compensation Amounts and Director Compensation Amounts from Profit Distribution, as well as Payment Methods and Recipients for 2023 14. Proposal to Adjust Transportation Expenses (Travel Allowances) for Directors Attending Relevant Meetings Starting from 2024 15. Proposal for Performance Targets and Related Employee Stock Option Plan (ESOP) Distribution Ratios for 2022 16. Proposal to Set the Base Date for Issuing New Shares through Employee Stock Options (ESOP) Conversion for Q4 of 2023 17. Proposal for the Company's Internal Control System Declaration for 2023 18. Proposal for Loan Application Limits with Various Banks 19. Proposal for Regular Assessment of Independence and Competence in	Nil	-

		Appointing Certified Public Accountants 20. Proposal to Amend Certain Provisions of the Company's Board Meeting Rules 21. Proposal to Amend Certain Provisions of the Company's Audit Committee Organizational Regulations 22. Proposal for Scheduling Time, Location, and Agenda for the Annual Shareholders' Meeting in 2024		
2024.05.10	12th term, 6th meeting	1. Report on the Fifth Meeting of the Twelfth Board of Directors and Its Implementation Status 2. Report on the Fifth Meeting of the Fourth Audit Committee 3. Report on the Fourth Meeting of the Fifth Compensation Committee 4. Report on the First Quarter Business Situation and Consolidated Financial Statements for 2024 5. Report on the Second Quarter Business Situation for 2024 6. Report on Derivative Financial Instrument Transactions of the Company and Its Subsidiaries from February to April 2024 7. Report on the Status of Funds Lent and Guaranteed by the Company and Its Subsidiaries as of April 30 of 2024 8. Report on the Implementation of the Audit Plan for the First Quarter of 2024 9. Report on the Sustainable Development Framework, Strategic Planning, Related Goals, Indicators, and Achievement Status, Greenhouse Gas Inventory and Verification Results of the Company and Its Subsidiaries, as Well as Stakeholder Communication and Response Results 10. Report on the Operation and Execution Results of the Company's Risk Management Policies and Procedures 11. Report on the Company's Sustainable Product Management Policy 12. Proposal for the First Quarter Business Situation and Consolidated Financial Statements for 2024 13. Proposal to Approve the Company's 2023 Corporate Sustainability Report 14. Proposal for the Annual Compensation Adjustment of the Company's Chairman 15. Proposal for the Salary Adjustment of Employees and Managers (Including Assistant Managers) for 2024 16. Proposal to Set the Base Date for the Conversion and Issuance of New Shares for Employee Stock Options in the First Quarter of 17. Proposal for the Company's Loan Application with Banks 18. Proposal for the Company to Act as a Co-signer for Loan Applications with Banks for Its Subsidiaries 19. Proposal for the Appointment or Removal of the Company's Chief Accounting Officer 20. Proposal for Changes in the Company's Corporate Governance Officer	Nil	-
2024.08.09	12th term, 7th meeting	1. Report on the Minutes and Implementation Status of the Sixth Meeting of the Twelfth Board of Directors 2. Report on the Minutes of the Sixth Meeting of the Fourth Audit Committee 3. Report on the Second Quarter Business Situation and Consolidated Financial Statements for 2024 4. Report on the Third Quarter Business Situation for 2024 5. Report on Derivative Financial Instrument Transactions of the Company and Its Subsidiaries from May to July 2024 6. Report on the Status of Funds Lent and Guaranteed by the Company and Its Subsidiaries as of July 31, 2024 7. Report on the Implementation of the Audit Plan for April to June 2024 8. Report on the Renewal Status of Directors and Officers Liability Insurance 9. Report on the Current Management and Future Planning of Intellectual Property Rights 10. Report on the Introduction and Implementation of ISO37001 Anti-Bribery Management System Certification for 2024 11. Report on the Expansion of Production Line Equipment and Factory for E Ink Corporation, a 100% Owned Subsidiary in the United States 12. Report on the New Production Equipment Construction Project at the New Hsinchu Factory 13. Report on the New Production Equipment Construction Project at Chianchi Optoelectronics Technology (Yangzhou) Co., Ltd., a 100% Invested Subsidiary	Nil	-

		14. Report on the Five-Year Syndicated Loan Arrangement with Mega International Commercial Bank Co., Ltd., Bank of Taiwan, and Hwatai Commercial Bank Co., Ltd. to Repay Existing Loans and Enhance Mid-Term Operating Funds 15. Proposal for the Second Quarter Business Situation and Consolidated Financial Statements for 2024 16. Proposal to Set the Base Date for Issuing New Shares through Employee Stock Options (ESOP) Conversion for Q2 of 2024 17. Proposal for Loan Application Limits with Banks 18. Proposal for the Company to Act as a Co-signer for Loan Applications with Banks for Its Subsidiaries 19. Proposal for the New Production Equipment Construction Project at the New Hsinchu Factory 20. Proposal for a Five-Year Syndicated Loan Arrangement with Mega International Commercial Bank Co., Ltd., Bank of Taiwan, and Hwatai Commercial Bank Co., Ltd. to Repay Existing Loans and Enhance Mid-Term Operating Funds		
2024.11.06	12th term, 8th meeting	1. Report on the Minutes and Implementation Status of the Seventh Meeting of the Twelfth Board of Directors 2. Report on the Minutes of the Seventh Meeting of the Fourth Audit Committee 3. Report on the Minutes of the Third Meeting of the Second Sustainability Development Committee 4. Report on the Third Quarter Business Situation and Consolidated Financial Statements for 2024 5. Report on the Business Situation for 2024 6. Report on Derivative Financial Instrument Transactions of the Company and Its Subsidiaries from August to September 2024 7. Report on the Status of Funds Lent and Guaranteed by the Company and Its Subsidiaries as of September 30, 2024 8. Report on the Implementation of the Audit Plan for July to September 2024 9. Report on Sustainability Development Planning, Goals, Indicators, Risks, and Achievement Status 10. Report on the Implementation of Information Security Management for 2024 11. Report on the Construction of the Fremont Factory by E Ink Corporation, a 100% Owned Subsidiary in the United States 12. Proposal for the Third Quarter Business Situation and Consolidated Financial Statements for 2024 13. Proposal to Set the Base Date for Issuing New Shares through Employee Stock Options (ESOP) Conversion for Q3 of 2024 14. Proposal for Loan Application Limits with Various Banks 15. Proposal for Providing Funds to Yuanhan Materials Co., Ltd., a 100% Owned Subsidiary	Nil	-
2024.12.13	12th term, 9th meeting	1. Report on the Minutes and Implementation Status of the Eighth Meeting of the Twelfth Board of Directors 2. Report on the Minutes of the Eighth Meeting of the Fourth Audit Committee 3. Report on the Minutes of the Fifth Meeting of the Fifth Compensation Committee 4. Report on Derivative Financial Instrument Transactions of the Company and Its Subsidiaries from October to November 2024 5. Report on the Status of Funds Lent and Guaranteed by the Company and Its Subsidiaries as of November 30, 2024 6. Report on the Implementation of Integrity Management for 2024 7. Report on the Operation of the ISO37001 Anti-Bribery Management System for 2024 8. Proposal for the 2025 Operational Plan and Budget 9. Proposal for the 2025 Audit Plan 10. Proposal to Amend Certain Provisions of the Company's Internal Control System 11. Proposal for the Performance Targets and Stock Incentive Plan for Managers in 2024 12. Proposal for the Distribution of Employee Stock Options for 2023 13. Proposal for Loan Application Limits with Various Banks	Nil	-

(II) Any other documented objections or reservations raised by an independent director against board resolution in relation to matters other than those described above: None.

II. Disclosure regarding avoidance of interest-conflicting motions, including the names of directors concerned, the motions, the nature of conflicting interests, and the voting process:

(1) In the 5th meeting of the 12th Board of Directors, the proposed performance goals for 2022 and the corresponding employee stock option plan (ESOP) distribution ratio were discussed. Chairman Johnson Lee, Director Luke Chen, and Director FY Gan had a conflict of interest in the matter, and thus, in accordance with the law, did not participate in the discussion and vote. The meeting was presided over by Independent Director Huey-Jen Su. The proposal was passed without objection after the acting chairperson consulted with other attending directors who had no conflict of interest.

(2) In the 6th meeting of the 12th Board of Directors, the proposed annual salary adjustment for the Chairman of the Board was discussed. Chairman Lee, due to a personal conflict of interest, abstained from the discussion and vote, in accordance with the law. The meeting was presided over by Independent Director Huey-Jen Su. The proposal was passed without objection after the acting chairperson consulted with other attending directors who had no conflict of interest.

(3) In the 9th meeting of the 12th Board of Directors, the proposed performance goals for 2024 and the stock reward plan for the company's managers were discussed. Chairman Johnson Lee, Director Luke Chen, and Director FY Gan had a conflict of interest in the matter, and thus, in accordance with the law, did not participate in the discussion and vote. The meeting was presided over by Independent Director Huey-Jen Su. The proposal was passed without objection after the acting chairperson consulted with other attending directors who had no conflict of interest.

(4) In the 9th meeting of the 12th Board of Directors, the proposed employee stock option distribution plan for 2023 was discussed. Chairman Johnson Lee, Director FY Gan, and Director Luke Chen, in accordance with the conflict of interest principle, abstained from the discussion and vote. The meeting was presided over by Independent Director Huey-Jen Su. The proposal was passed without objection after the acting chairperson consulted with other attending directors who had no conflict of interest.

(5) In the 10th meeting of the 12th Board of Directors, the proposed distribution of profit for 2024, including the employee compensation amount, director remuneration amount, distribution method, and recipients, was discussed: (1) The remuneration and distribution method for independent directors were discussed. Independent Directors Po-Young Chu, Huey-Jen Su, and Chang-Mou Yang abstained from the discussion and vote due to personal conflicts of interest. The proposal was passed without objection after the chairperson consulted with other attending directors. (2) The remuneration and distribution method for general directors were discussed. Chairman Johnson Lee, Director Sylvia Cheng, Director FY Gan, and Director Luke Chen abstained from the discussion and vote due to personal conflicts of interest. The meeting was presided over by Independent Director Huey-Jen Su. The proposal was passed without objection after the acting chairperson consulted with other attending directors who had no conflict of interest.

III. TWSE/TPEx listed companies are required to disclose the cycle, duration, scope, method, and detail of board performance self (or peer) evaluations performed; please refer to section (2) Execution of Board Performance Evaluation.

IV. Enhancement to the functionality of the board of directors in the current and the most recent year (e.g., establishment of an Audit Committee, improvement of information transparency etc.), and the progress of such enhancements:

The company has established a "Board Performance Evaluation Method." According to this method, the board's performance is evaluated annually through a self-assessment questionnaire. The company has completed the internal evaluation of the Board of Directors and functional committees for the 2024 fiscal year (evaluation period: November 1, 2023 to October 31, 2024). The evaluation results were submitted to the 10th meeting of the 12th Board of Directors to establish performance goals and enhance the efficiency of the board's operations.

Note: Calculated based on the number of board of directors meetings held and in-person attendance during active duty.

(2) Execution of Board Performance Evaluation

A. Internal Evaluation Operation Explanation

In accordance with the requirements of the Taipei Exchange and the company's Board Performance Evaluation Method, the company is required to complete the board performance evaluation annually and report the evaluation results in the first quarter of the following year. For the 2024 fiscal year, the internal self-assessment method was used, and the evaluation results were submitted and approved at the 10th meeting of the 12th Board of Directors on February 21, 2025. The details of the internal evaluation process are as follows:

Year	Evaluation method	Evaluation period	Evaluation Scope	Evaluation Criteria
2024	Board of Directors (including Functional Committees) Performance Self-Assessment Questionnaire	From November 1, 2023, to October 31, 2024	(1)Overall Board of Directors	A. Understanding and suggestions for the company's operations B. Enhancing the quality of the board's decision-making C. Composition and structure of the board D. Selection and ongoing education of directors E. Internal controls
			(2)Board Members	A. Understanding of the company's goals and mission B. Awareness of director responsibilities C. Understanding and suggestions for the company's operations D. Internal relationship management and communication E. Professionalism and ongoing education of directors F. Internal controls
			(3)Audit Committee	A. Understanding of and suggestions for the company's operations B. Awareness of the responsibilities of the Audit Committee C. Enhancing the decision-making quality of the Audit Committee D. Composition and appointment of members of the Audit Committee E. Internal controls

Year	Evaluation method	Evaluation period	Evaluation Scope	Evaluation Criteria
			(4)Compensation Committee	A. Understanding and suggestions for the company's operations B. Awareness of the responsibilities of the Remuneration Committee C. Enhancing the decision-making quality of the Remuneration Committee D. Composition and appointment of members of the Remuneration Committee
			(5)Sustainable Development Committee	A. Understanding and suggestions for the company's operations B. Awareness of the responsibilities of the Sustainable Development Committee C. Enhancing the decision-making quality of the Sustainable Development Committee D. Composition and appointment of members of the Sustainable Development Committee

B. Evaluation Results

I. Questionnaire Evaluation Results

Evaluation Scope	Evaluation Indicator	Self-assessment Score		Evaluation Results (Note1)
Overall Board of Directors	A. Understanding and suggestions for the company's operations	96.67	97.04	Good
	B. Enhancing the quality of the board's decision-making	98.33		
	C. Composition and structure of the board	98.77		
	D. Selection and ongoing education of directors	95.10		
	E. Internal controls	96.33		
Board Members	A. Understanding of the company's goals and mission	99.05	97.18	Good
	B. Awareness of director responsibilities	97.14		
	C. Understanding and suggestions for the company's operations	96.43		
	D. Internal relationship management and communication	96.18		
	E. Professionalism and ongoing education of directors	97.14		
	F. Internal controls	97.14		
Audit Committee	A. Understanding of and suggestions for the company's operations	100.00	99.55	Good
	B. Awareness of the responsibilities of the Audit Committee	100.00		
	C. Enhancing the decision-making quality of the Audit Committee	100.00		
	D. Composition and appointment of members of the Audit Committee	100.00		
	E. Internal controls	97.77		
Compensation Committee	A. Understanding and suggestions for the company's operations	100.00	99.67	Good
	B. Awareness of the responsibilities of the Remuneration Committee	98.67		
	C. Enhancing the decision-making quality of the Remuneration Committee	100.00		
	D. Composition and appointment of members of the Remuneration Committee	100.00		
Sustainable Development Committee	A. Understanding and suggestions for the company's operations	100.00	99.67	Good
	B. Awareness of the responsibilities of the Sustainable Development Committee	98.67		
	C. Enhancing the decision-making quality of the Sustainable Development Committee	100.00		
	D. Composition and appointment of members of the Sustainable Development Committee	100.00		

Note: The self-assessment results of this performance evaluation indicate that all directors (including independent directors) gave positive feedback on the efficiency and effectiveness of the Board of Directors, board members, and functional committees. These results were submitted and approved at the 10th meeting of the 12th Board of Directors on February 21, 2025, and will serve as a reference for future review and improvement.

II. Evaluation Conclusion and Recommendations

Evaluation Scope	Items	Conclusion and Recommendations
Overall Board of Directors	Directors read and understand the meeting materials in advance before board meetings.	● In accordance with the law, meeting materials will be provided 7 days prior to the meeting, and efforts will be made to strengthen communication with the directors regarding the company's operational overview and arrange for discussions with the relevant management team.
	Board members have sufficient understanding of the company, its management team, and the industry to which the company belongs.	● Efforts will be made to strengthen communication with the directors regarding the company's operational overview and arrange for discussions with the relevant management team. ● Efforts will be made to encourage director participation in strategic meetings and seek their feedback and suggestions.
	The information provided to the board is complete, timely, and of a certain quality, enabling the board (including independent directors) to effectively fulfill its responsibilities.	
	The board provides appropriate onboarding instructions for new directors, helping them understand their duties and familiarize themselves with the company's operations and environment.	

Evaluation Scope	Items	Conclusion and Recommendations
	The board is able to effectively evaluate and oversee the effectiveness of various internal control systems and risk management processes.	● Strengthen communication between the audit and risk management teams and the board to ensure an understanding of the company's situation. ● Arrange for directors to participate in risk management training courses.
	Directors thoroughly assess and oversee the various existing or potential risks faced by the company and discuss the implementation and monitoring of internal control systems.	● Strengthen communication between the audit and risk control teams and the board to ensure a thorough understanding of the company's situation. ● Recommend that directors participate in risk management training courses.
	The board effectively evaluates and oversees the effectiveness of internal control systems and risk management.	
	The internal control systems approved by the board include five key elements/principles and cover control operations for all operational activities and transaction cycles.	
	When auditors provide non-audit services, appropriate arrangements are made to ensure the auditors' objectivity and independence.	● The certified public accountant attends the Audit Committee meetings each year to engage in discussions with independent directors and is also planning to invite directors to participate and engage in discussions.
	The company has established a rigorous and transparent process for selecting directors and a succession plan.	● When planning the selection of directors, it should align with professional, diversity policies, and operational models, ensuring that the board continues to meet the company's strategic development needs at different stages.
	The company maintains a formal record of board training hours and a continuous professional development program to enhance directors' knowledge and skills.	● The board's continuing education plan considers the number of directors, and the training courses are organized as group-based board training programs. ● The Secretariat will provide directors with information on relevant functions (e.g., risk management training courses) and assist with the registration process.
Board Members	New directors have understood their duties and familiarized themselves with the company's operations and environment.	● Strengthen communication with the board regarding the company's operational overview and arrange discussions with the relevant management team.
	Directors have a clear understanding of the company, its management team, and the industry to make professional and appropriate judgments.	
	Directors have thoroughly assessed and overseen the various existing or potential risks faced by the company and discussed the implementation and monitoring of internal control systems.	● Strengthen communication between the audit and risk management teams and the board to ensure a thorough understanding of the company's situation.
	Directors have thoroughly assessed and overseen the various existing or potential risks faced by the company and discussed the implementation and monitoring of internal control systems.	
Audit Committee	The Audit Committee is able to effectively evaluate and oversee the effectiveness of various internal control systems and risk management processes.	● Strengthen communication between the audit and risk control teams and the board to ensure a thorough understanding of the company's situation. ● Arrange special discussions on risk topics during each Audit Committee meeting. ● Recommend that directors participate in risk management training courses.
Compensation Committee	The Compensation Committee is able to thoroughly assess and oversee the various existing or potential risks faced by the company.	● Strengthen communication between the audit and risk control teams and the board to ensure a thorough understanding of the company's situation. ● Strengthen communication between HR and the board to ensure a clear understanding of the company's compensation and related policies.
Sustainable Development	The Sustainability Committee is able to thoroughly assess and oversee the various existing or potential risks faced by the company.	● The Sustainability Committee has shown significant improvement in both its contribution and operations.

Note 1 : The evaluation results are presented in 5 grades, with the assessment criteria explained as follows:

Score	100	99-80	79-60	59-40	39-20	Below 20
Result	Excellent	Good	Average	Disagree	Very Disagree	NA

Note 2 : Represents the frequency of board performance evaluation, e.g.: once a year.
Note 3 : Represents the duration covered by performance evaluation, e.g.: evaluate the performance of the Board of Directors from November 1, 2023 to October 31, 2024.
Note 4 : The scope of assessment covers the board's performance as a whole, the individual directors, and functional committees.

Note 5 : Assessment methods include: internal board self-assessment, director self-assessment, peer assessment, assessment by an external institution or expert, and other methods as deemed appropriate.

Note 6 : Assessment details, by the scope of assessment, include at least the following:

(1) Board performance evaluation: board's participation in the Company's operations, the quality of board's decisions, the board's composition, election and ongoing education of board members, and enforcement of internal control.

(2) Director individual performance evaluation: includes at least director's awareness towards the Company's goals and missions, awareness to duties, level of participation in the Company's operations, maintenance of internal relations and communication, professionalism and continuing education, and internal controls.

(3) Performance evaluation for functional committees: Engagement with the Company's operations, awareness of duties and responsibilities, quality of committee's decisions, composition and selection of members, and internal control.

2.2.2 Audit Committee

A. Audit Committee

The company established the Audit Committee on June 18, 2014. In the most recent year (2024), the committee held 6 meetings (A), with the attendance details as follows:

Title	Name	Actual Attendance (B)	Proxy Attendance	Attendance Rate (%)(B/A)	Remarks
Independent Director	Po-Young Chu	6	0	100%	Convener
Independent Director	Huey-Jen Su	6	0	100%	
Independent Director	Chang-Mou Yang	6	0	100%	

Other mandatory disclosures:

I. For Audit Committee meetings that concern any of the following, state the date and session of Audit Committee meeting, the motions discussed, the Audit Committee's resolutions, and how the Company has handled Audit Committee's opinions.

(I) Conditions described in Article 14-5 of the Securities and Exchange Act.

Date of meeting	Session	Motion		Opposing opinions from independent directors	Company's response to Audit Committee's conflicting opinions
2024/2/22	4th Meeting of the 4th committee	1	Report on the derivative financial instruments transactions of the company and its subsidiaries for December 2023 and January 2024.	Nil	-
		2	Report on the status of loans and endorsements/guarantees by the company and its subsidiaries as of January 31, 2024.		
		3	Report on the execution status of the company's audit plan from October to December 2023.		
		4	Report on the performance evaluation results of the company's board of directors, directors, and functional committees for 2023.		
		5	Preparation of the company's 2023 financial statements.		
		6	Proposal for setting the base date for employee stock warrants conversion into new shares for the fourth quarter of 2023.		
		7	Proposal for the 2023 earnings distribution plan of the company.		
		8	Proposal for the company's 2023 "Internal Control System Statement."		
		9	Proposal for the periodic assessment of the independence and suitability of the company's appointed CPA.		
		10	Proposal to amend certain provisions of the company's "Audit Committee Charter."		
2024/5/10	5th Meeting of the 4th committee	1	Report on the derivative financial instruments transactions of the company and its subsidiaries from February to April 2024.	Nil	-
		2	Report on the status of loans and endorsements/guarantees by the company and its subsidiaries as of April 30, 2024.		
		3	Report on the execution status of the company's audit plan from January to March 2024.		
		4	Proposal for the operating performance and consolidated financial statements for the first quarter of 2024.		
		5	Proposal for the company to act as a joint issuer for the subsidiary's bank financing loan applications.		
		6	Proposal to set the base date for employee stock warrants conversion into new shares for the first quarter of 2024.		
		7	Proposal for the appointment or dismissal of the company's chief accounting officer.		
2024/8/9		1	Report on the derivative financial instruments transactions of the company and its subsidiaries from May to July 2024.	Nil	-

	6th Meeting of the 4th committee	2	Report on the status of loans and endorsements/guarantees by the company and its subsidiaries as of July 31, 2024.		
		3	Report on the execution status of the company's audit plan from April to June 2024.		
		4	Proposal for the operating performance and consolidated financial statements for the second quarter of 2024.		
		5	Proposal to set the base date for employee stock warrants conversion into new shares for the second quarter of 2024.		
		6	Proposal for the company to act as a joint issuer for the subsidiary's bank financing loan applications.		
		7	Proposal for the new production equipment at the company's new Hsinchu plant.		
2024/11/6	7th Meeting of the 4th committee	1	Report on the derivative financial instruments transactions of the company and its subsidiaries from August to September 2024.	Nil	-
		2	Report on the status of loans and endorsements/guarantees by the company and its subsidiaries as of September 30, 2024.		
		3	Report on the execution status of the company's audit plan from July to September 2024.		
		4	Proposal for the operating performance and consolidated financial statements for the third quarter of 2024.		
		5	Proposal to set the base date for employee stock warrants conversion into new shares for the third quarter of 2024.		
		6	Proposal for the company to provide financing to Yuanhan Materials Co., Ltd., a wholly-owned subsidiary of the group.		
2024/12/13	8th Meeting of the 4th committee	1	Report on the derivative financial instruments transactions of the company and its subsidiaries for October to November 2024.	Nil	-
		2	Report on the status of loans and endorsements/guarantees provided by the company and its subsidiaries as of November 30, 2024.		
		3	Proposal for the allocation of employee stock options for non-managerial staff for fiscal year 2023.		
		4	Proposal for the "Audit Plan" for fiscal year 2025.		
		5	Proposal to amend certain operational regulations in the company's "Internal Control System."		
2024/12/30	9th (Extraordinary) Meeting of the 4th committee	1	Proposal to amend the allocation plan for employee stock options for non-managerial staff for fiscal year 2023.	Nil	-

(II) In addition to the aforementioned issues, any other motions not passed by the Audit Committee but passed by the Board at the consent of more than two-thirds of the Directors: Not applicable.

II. Avoidance of involvements in interest-conflicting motions by independent directors, including details such as the name of independent director, the motion, the nature of conflicting interests, and involvement in the voting process: None.

III. The communication between the Independent Directors and the Chief Internal Auditor and the CPAs (including the financial position and state of business operation in materiality, the means of communication, and the result):

(1) The Audit Committee convenes regularly and will invite certified public accountants, Chief Internal Auditor, and related officers to attend the meeting.

(2) The internal auditors conduct audits in accordance with the Annual Audit Plan and report to the Audit Committee on the audit findings. The Audit Committee evaluates the internal control system, the internal auditors, and the pursuit of internal audits regularly.

(3) The Audit Committee exchanges opinions with the certified public accountants retained by the Company on the review or audits of the quarterly financial statements and related legal matters, and evaluate the independence of the certified public accountants on the selection, the audit and non-audit services rendered by the certified public accountants.

Note: Calculated based on the number of Audit Committee meetings held and in-person attendance during active duty.

2.2.3 The pursuit of corporate governance and the variation with the Corporate Governance Best Practice Principles for TWSE/TPEx listed Companies, and the reason:

Items for evaluation	The pursuit			Variation from the Corporate Governance Best Practice Principles for TWSE/TPEx-listed Companies and the reason
	Yes	No	Summary	
I. Has the Company instituted and disclosed corporate best practice principles in accordance with the Corporate Governance Best Practice Principles for TWSE/TPEx-listed Companies?	v		● "The Corporate Governance Best Practice Principles" was passed by the Board of Directors on December 19, 2019. The contents can be viewed on the corporate website (http://www.eink.com).	● Relevant
II. The structure of shareholding and rights of the shareholders of the Company				
(I) Has the Company established internal operation procedures for responding to the suggestions, queries, disputes and legal actions of the shareholders, and follow the procedures?	v		● The Company has appointed a spokesman, acting spokesman, and designated legal affairs staff who respond to the suggestions, queries, disputes, and legal actions of the shareholders in accordance with the operation procedure.	● Relevant
(II) Has the Company kept the list of the dominant shareholders that exercise de facto control of the Company and the parties that exercise ultimate control of these dominant shareholders under control?	v		● Inquiry with the share registration and investor service agent at any time for proper information.	● Relevant
(III) Has the Company established and exercised risk control and firewall mechanisms with its affiliates?	v		● The Company has instituted related rules and regulations governing the operation, business and financial transactions between the Company and the affiliates.	● Relevant
(IV) Has the Company instituted internal rules and regulations to prohibit insiders of the Company from using information undisclosed in the market for the trading of securities?	v		● The Company has instituted the "Procedure for the Prevention of Insider Trade" to prohibit insiders of the Company using information not disclosed in market for the trading of securities.	● Relevant
III. The organization and function of the Board				
(I) Does the Board develop and implement a diversified policy and substantive management objectives for the composition of its members?	v		● The members of the Board are experts from different professional backgrounds, of both sexes, and in different areas of specializations. This composition makes the structure of the Board perfect. For more information on the Board diversity policy, substantive management objectives, and their implementation, please refer to section 2.1.2.	● Relevant
(II) Further to the establishment of the Remuneration Committee and the Auditing Committee as required by law, has the Company voluntarily established related functional committees?	v		● The establishment of the Sustainable Development Committee was passed by the board on November 4, 2022.	● Relevant
(III) Does the company establish a standard to measure the performance of the Board and implement it annually, and are performance evaluation results submitted to the Board of Directors and referenced when determining the remuneration of individual directors and nominations for reelection?	v		● The company has established the Board of Directors' performance evaluation measures and assessment methods on December 19th, 2019. The evaluation results are regularly reported to the Board of Directors on an annual basis.	● Relevant
(IV) Has the Company conducted routine evaluation of the independence of the certified public accountants who conducted the external audits and certification?	v		● The Company reviews the independence of the certified public accountants being retained annually. The findings will be reported to a session of the Audit Committee scheduled to be held on February 21, 2025, and to a session of the Board scheduled to be held on February 21, 2025, for approval. The Accounting Department has assessed the independence of CPAs Hui-Ming Huang and Ya-Ling Weng from Deloitte Taiwan in accordance with the standard of independence of the Company. The result indicated that both CPAs are eligible for acting as the external independent auditors for the Company in financial audit and certification and for issuing related declaration. The details of the report can be found in section 6.9.	● Relevant
IV. Does the company appoint a suitable number of competent personnel and a supervisor responsible for corporate governance matters	v		● The Company has appointed designated personnel to administer corporate governance, including the supply of information to the needs of the Directors and	● Relevant

Items for evaluation	The pursuit			Variation from the Corporate Governance Best Practice Principles for TWSE/TPEx-listed Companies and the reason
	Yes	No	Summary	
(including but not limited to providing information for directors and supervisors to perform their functions, assisting directors and supervisors with compliance, handling work related to meetings of the board of directors and the shareholders' meetings, and producing minutes of board meetings and shareholders' meetings)?			Independent Directors for their performance of assigned duties, holding conventions of the Board and the Shareholders Meeting as required by law, making company registration and registration of change, compilation of minutes of Board meetings and Shareholders Meeting on record. ● For the Scope of Authority, Business Highlights during the Year, and Continuing Education of the Chief Governance Officer, please refer to section 6.6.	
V. Has the Company developed the channels for the communications with the stakeholders (including without limiting to shareholders, employees, customers and suppliers) and established a special section for the stakeholders at the official website of the Company with proper response to the concerns of the stakeholders in the aspect of corporate social responsibility?	v		● The Company has established the system of spokesman and provided the update information of the Company and communicate with stakeholders on issues pertaining to corporate social responsibility through the stakeholder section of the official website of the Company, the quarterly supplier meetings, and customer satisfaction survey.	● Relevant
VI. Has the Company commissioned a professional share registration and investor services agent for handling matters related to Shareholder Meeting?	v		● The Company has appointed SinoPac Securities Corp. to organize the Shareholders Meeting and handle related matters.	● Relevant
VII. Disclosure of information				
(I) Has the Company installed an official website for the disclosure of information on finance, operation, and corporate governance?	v		● The Company has installed its official website (http://www.eink.com) to provide related financial and operation information and appointed designated personnel to maintain and update the content.	● Relevant
(II) Has the Company adopted other means for disclosure (such as the installation of a website in the English language, appointment of designated persons to the collection and disclosure of information on the Company, the implementation of the spokesman system, and the videotape on institutional investor conferences)?	v		● The Company has set up the Public Relation Office and the Share Registration and Investor Service Office to perform the function of information gathering and disclosure. The Company also has had an official website in the English language, and properly implemented the spokesman system.	● Relevant
(III) Does the company announce and report annual financial statements within two months after the end of each fiscal year, and announce and report Q1, Q2, and Q3 financial statements, as well as monthly operation results, before the prescribed time limit?	v		● The Company announced and filed annual financial statements, the Q1, Q2 and Q3 financial statements, as well as monthly operation results within the prescribed time limits in accordance with the relevant provisions of the Securities and Exchange Act. The above disclosures can be viewed at the Market Observation Post System website: https://mopsov.twse.com.tw/mops/web/t57sb01_q1 https://mopsov.twse.com.tw/mops/web/t05st10_ifrs	● Relevant
VIII. Is there any vital information that helps to understand the actions on corporate governance better (including without limiting to employee rights, employee care, investor relation, supplier relation, stakeholder right, the continuing education of the Directors and Supervisors, risk management policy, and the standard of risk assessment and the pursuit of risk assessment, the pursuit of customer policy, professional liability insurance for the Directors and the Supervisors of the Company)?	v		Description below: (I) For information on the rights of employees, such as benefits, continuing education, training, and retirement system of the Company, refer to section 4.5. (II) The Company takes risk management and the impact on the environment into consideration for the advocacy of sustainable development and holds training programs in safety, health, and environment management for all at regular intervals. (III)The Company duly observed applicable laws and regulations governing environmental protection. For further information on environmental protection and related expenditures, please refer to section 4.4. (IV)The Company has instituted the procedure for the evaluation of suppliers. (V)The Company complied with the mandatory hours of continuing education for all directors in 2024. For more information, please refer to section 6.8. (VI)More than two-thirds of the Directors were present in each session of the Board to	● Relevant

Items for evaluation	The pursuit			Variation from the Corporate Governance Best Practice Principles for TWSE/TPEx-listed Companies and the reason
	Yes	No	Summary	
			participate in the operation of the Board. (VII)The recusal of the Directors on motions with a conflict of interest: Directors will recuse themselves from the discussion and voting of motions that involve a conflict of their personal interests. (VIII)Professional liability insurance for the protection of the Directors and Supervisors: the Company has taken professional liability insurance for the protection of the Directors.	

IX. The state of corrective action taken in response to the corporate governance evaluation result announced by the Corporate Governance Center of Taiwan Stock Exchange Corporation, and the issues required special effort for improvement and related measures.

(I) The result of the 10th corporate governance evaluation was the Top 5%

(II) Improvements, priorities and measures taken:

(i) Total promotion of sustainability

(ii) Implementation of board diversification targets

(III) The Company conducts an in-depth review of every item that we failed to score points for each year. Improvement measures are constantly being proposed and enforced in a bid to raise our score each year, improve the effectiveness of corporate governance, and realize the goals of sustainability.

2.2.4 Composition, Responsibilities and Operations of the Remuneration Committee

1. Remuneration Committee members

December 31, 2024

Status \ Criteria \ Name		Professional qualification and experience	Independence	Number of concurrent appointments to the remuneration committees of other public companies
Independent director (Convener)	Huey-Jen Su	Lecturer (or above) of commerce, law, finance, accounting, or any subject relevant to the Company's operations in a public or private tertiary institution eligibility Commercial, legal, financial, accounting or other work experiences required to perform the assigned duties	Satisfies criteria for independence	2
Independent director	Po-Young Chu	Lecturer (or above) of commerce, law, finance, accounting, or any subject relevant to the Company's operations in a public or private tertiary institution eligibility Commercial, legal, financial, accounting or other work experiences required to perform the assigned duties	Satisfies criteria for independence	3
Independent director	Chang-Mou Yang	Lecturer (or above) of commerce, law, finance, accounting, or any subject relevant to the Company's operations in a public or private tertiary institution eligibility Commercial, legal, financial, accounting or other work experiences required to perform the assigned duties	Satisfies criteria for independence	2

Note: For details on professional qualifications, experience, and independence, please refer to section 2.1.1 Information on the Directors.

2. Operation of the Remuneration Committee

(1) The Remuneration Committee has 3 members.

(2) Term of current Committee: 2023/06/29-2026/06/28. The Remuneration Committee was convened 4 times (A) in the last fiscal year. Committee members' qualifications and attendance were as follows:

Title	Name	Attendance in person (B)	Proxy attendance	Percentage of in-person attendance (%)(B/A)	Remarks
Convener	Huey-Jen Su	4	0	100%	
Members	Po-Young Chu	4	0	100%	
Members	Chang-Mou Yang	4	0	100%	

Other mandatory disclosures:

I. If the board of directors will decline to adopt, or will modify, a recommendation of the remuneration committee, the date of the board meeting, session, contents of the motion, the outcome of the board resolution, and the Company's response to recommendation of the remuneration committee (if the remuneration passed by the board exceeds the recommendation of the remuneration committee then the circumstances and cause for the difference shall be specified) shall be specified.

Explanation:

Board of Directors Date	Session	Motion	Outcome of the board resolution (If the remuneration passed by the board exceeds the recommendation of the remuneration committee then the circumstances and cause for the difference shall be specified)	Company's response to the opinion of the Remuneration Committee
Feb 23, 2024	5th meeting of the 12th board	1. Report on the 2023 performance evaluation results of the Board of Directors, directors, and functional committees.	Passed unanimously by all directors	-
		2. Proposal for the distribution of employee compensation and director remuneration for the 2023, including the amount, distribution method, and recipients.		
		3. Proposal to adjust the attendance allowance for the company's directors attending relevant meetings starting from the 2024.		
		4. Proposal on the 2022 performance targets and the allocation ratio of employee stock option plans ("ESOP").		
May 10, 2024	6th meeting of the 12th board	1. Proposal for the annual salary adjustment of the Chairman of the Board.	Passed unanimously by all directors	-
		2. Proposal for the 2024 salary adjustment for employees and executives at the Associate Vice President level and above.		
Dec 13, 2024	9th meeting of the 12th board	1. Proposal for the 2024 performance targets and stock-based compensation plan for company executives.	Passed unanimously by all directors	-
		2. Proposal for the allocation of employee stock options to managers for the 2023.		

II. If with respect to any resolution of the remuneration committee, any member has a dissenting or qualified opinion that is on record or stated in a written statement, the opinion shall be stated in the meeting minutes. The date of the remuneration committee meeting, session, motion, the opinions of all members, and the response to their opinions shall be recorded.

Explanation:

Remuneration Committee Date	Session	Motion	Outcome of resolution	Company's response to the opinion of the Remuneration Committee
Feb 22, 2024	3th meeting of the 5th committee	1 Report on the 2023 performance evaluation results of the Board of Directors, directors, and functional committees.	Passed unanimously by all members	-
		2 Proposal for the distribution of employee compensation and director remuneration for the 2023, including the amount, distribution method, and recipients.		
		3 Proposal to adjust the attendance allowance for the company's directors attending relevant meetings starting from the 2024.		
		4 Proposal on the 2022 performance targets and the allocation ratio of employee stock option plans ("ESOP").		
May 10, 2024		1 Proposal for the annual salary adjustment of the Chairman of the Board.	Passed unanimously by all members	-

	4th meeting of the 5th committee	2	Proposal for the 2024 salary adjustment for employees and executives at the Associate Vice President level and above.		
Dec 13, 2024	5th meeting of the 5th committee	1	Proposal for the 2024 performance targets and stock-based compensation plan for company executives.	Passed unanimously by all members	-
		2	Proposal for the allocation of employee stock options to managers for the 2023.		
Dec 30, 2024	6th meeting of the 5th committee	1	Proposal to amend the allocation of employee stock options to managerial personnel for the 2023.	Passed unanimously by all members	-

(3) Scope of authority:

1. Define and periodically review the policies, systems, standards, and structure of performance evaluation and remuneration for directors and officers.
2. Periodically review and determine the remuneration for directors and officers.

2.2.5 Composition, Responsibilities and Operations of the Corporate Sustainable Development Committee

I. Eligibility and Authority of Corporate Sustainable Development Committee members:

To enhance the execution of sustainability initiatives and strengthen governance and oversight of sustainability performance, E Ink's Board of Directors approved the establishment of the Board-level Sustainability Committee in 2022.

The Sustainability Committee's scope of work includes the development of environmentally friendly products, green manufacturing and climate change adaptation, employee development and occupational health and safety, corporate governance and ethical business practices, sustainable supply chain development, stakeholder engagement and social inclusion, as well as operational risk and opportunity management.

The Board-level Sustainability Committee is aligned with the existing Corporate Sustainability Committee at the operational level, overseeing the sustainability efforts of various working groups, including product sustainability, green manufacturing, corporate social responsibility, corporate governance, supply chain, special projects and stakeholder engagement, and risk management. In 2024, the Sustainability Committee held 2 meetings.

Scope of authority:

(1) Promote and enforce sustainable development policies of the Company, including the execution of corporate governance, business integrity, risk management, environmental, and social goals, strategies, and plans.
(2) Review and manage sustainable development progress and performance within the Company, and present reports and resolutions to the board of directors.
(3) Enhance communication with stakeholders, including government institutions, shareholders, the media, customers, suppliers, affiliated enterprises, employees, industry associations, the community, and the society, and address issues that are of significant concern to stakeholders.
(4) Supervise other sustainable development tasks resolved by the board of directors.

II. Professional qualifications and experience of Sustainable Development Committee members, and committee operations:

(I) The Sustainable Development Committee has 5 members.
(II) Term of current Committee: June 29, 2023, to June 28, 2026. The Sustainable Development Committee was convened 2 times (A) in the last fiscal year. Committee members' professional qualifications. experience, attendance, and agenda are shown below:

Title	Name	Professional qualification and experience	Attendance in person (B)	Proxy attendance	Percentage of in-person attendance(%) (B/A) (Note)	Remarks
Convener	Johnson Lee	Work experience in commerce, law, finance and banking, accounting or necessary for company operation. Sustainability, risk management, information security, and nature-related governance.	2	0	100%	
Committee Member	FY Gan	Work experience in commerce, law, finance and banking, accounting or necessary for company operation; climate change, human rights, occupational safety and health, supply chain, and related governance.	2	0	100%	
Committee Member (Independent director)	Po-Young Chu	Work experience in commerce, law, finance and banking, accounting or necessary for company operation； Expertise in business management,and sustainable governance.	2	0	100%	
Committee Member (Independent director)	Huey-Jen Su	Work experience in commerce, law, finance and banking, accounting or necessary for company operation； Expertise in business management, ,	2	0	100%	

		financial management, risk management, and sustainable governance.				
Committee Member (Independent director)	Chang-Mou Yang	Work experience in commerce, law or necessary for company operation s；Expertise in business management,risk management, and sustainable governance.	2	0	100%	

Other mandatory disclosures:

(1) If the board of directors will decline to adopt, or will modify, a Sustainable Development Committee, the date of the board meeting, session, contents of the motion, the outcome of the board resolution, and the Company's response to recommendation of the Sustainable Development Committee.

Explanation:

Remuneration Committee Date	Session	Motion	Outcome of resolution	Company's response to the opinion of the Sustainable Development Committee
2024.05.10	6th meeting of the 12th board	1. Report on the Second Meeting of the Second Term Sustainability Development Committee of the Company.	Passed unanimously by all directors	-
		2. Report on Sustainability Framework, Strategic Planning, Related Objectives, Indicators, and Achievement Status, Greenhouse Gas Inventory and Verification Results of the Company and Subsidiaries, Stakeholders, Major Themes, Communication, and Response Results.		
		3. Report on the Operation and Execution Results of the Company's Risk Management Policy and Procedures.		
		4. Report on the Company's Sustainable Product Management Policy.		
		5. Proposal to Approve the Company's 2023 Corporate Sustainability Report.		
2024.11.06	7th meeting of the 12th board	1. Report on the Third Meeting of the Second Term Sustainability Development Committee of the Company.	Passed unanimously by all directors	-
		2. Report on Sustainability Development Planning, Objectives, Indicators, Risks, and Achievement Status of the Company.		

(2) Meeting date, session, agenda, content, recommendations or objections from Sustainable Development Committee members, decision results, and company's response to Sustainable Development Committee opinions on major agenda items of the Sustainable Development Committee.

Explanation:

Sustainability Development Committee Date	Term	Agenda Content	Resolution Result	Company's Response to Sustainability Development Committee's Comments
2024.4.18	Second Term, Second Meeting	1. Report on Sustainability Framework, Strategic Planning, and Goal Progress	All Committee Members agreed to approve	-
		2. Report on the Operation and Execution Results of the Risk Management Policy and Procedures		
		3. Report on the "Sustainable Product Management Policy"		
		4. Report on the Greenhouse Gas Inventory and Verification Results of the Company and Subsidiaries		
		5. Report on Stakeholders, Major Themes, and Communication and Response Results		
		6. Report on the 2023 Corporate Sustainability Report		
		7. Report on Sustainability Goals, Indicators, and Risks for the Sustainable Supply Chain		
		8. Report on Sustainability Goals, Indicators, and Risks for Green Manufacturing		
		9. Report on Sustainability Goals, Indicators, and Risks for Product Sustainability		
		10. Report on Sustainability Goals, Indicators, and Risks for Corporate Care		
2024.10.02		1. Report on Sustainability Rating Indicators and Performance	All Committee	-
		2. Report on Sustainability Goals and Indicators for Corporate Governance		

		Second Term, Third Meeting	3. Report on Sustainability Goals, Indicators, and Risks for Corporate Care	Members agreed to approve	
			4. Report on Sustainability Goals, Indicators, and Risks for the Sustainable Supply Chain		
			5. Report on Sustainability Goals and Indicators for Product Sustainability		
			6. Report on Sustainability Goals and Indicators for Green Manufacturing		
			7. Report on Sustainability Goals and Indicators for Social Inclusion		

2.2.6 Implementation status of sustainable development, deviations from the Sustainable Development Best Practice Principles for TWSE/TPEx Listed Companies, and the reason for such deviations

Implementation Item	Current progress:			Deviations from the Sustainable Development Best Practice Principles for TWSE/TPEx Listed Companies, and the reason for such deviations
	Yes	No	Summary	
1. Does the company establish a governance structure for the implementation of sustainable development, along with a unit that specializes (or is involved) in sustainable development? Does the unit report to the Board of Directors with its operation delegated to the senior management?	●		To effectively promote the implementation of sustainable development work and strengthen the governance and supervision of sustainable development outcomes, the Board of Directors of our company established a functional "Sustainable Development Committee" at the board level in November 2022. It also established the "Sustainability Management Department" as a full-time unit, along with the "Secretariat," to coordinate and promote related matters. Additionally, a "Guidance Committee" composed of senior executives provides necessary guidance and assistance. The functional team discusses and plans work goals and blueprints monthly, confirms the progress of implementation, reports to the Chairman quarterly, and reports annually to the Board of Directors in accordance with the "Sustainability and Social Responsibility Guidelines." For details of the report to the Board of Directors by the Sustainable Development Committee for the fiscal year 2024, please refer to section 2.2.5. The Board of Directors will provide valuable suggestions and guidance to the management team based on the management team's reports and the strategic objectives set, as appropriate to the company's situation. The management team will incorporate the Board's suggestions into its implementation objectives and adjust them in a timely manner. Progress and effectiveness will be reported to the Board again to achieve the effectiveness of promoting sustainable development.	Relevant
2. Does the company conduct risk assessments on environmental, social and corporate governance issues that are relevant to its operations, and implemented risk management policies or strategies based on principles of materiality?	●		In 2022, the company passed the "Risk Management Policy and Procedures" through the board of directors and established the "Sustainable Development Committee" under the board of directors to supervise the operation mechanism of risk management and submit proposals related to risk management to the board of directors for decision-making. The Sustainable Development Committee conducts analyses based on the principles of significance in the sustainability report, communicates with internal and external stakeholders, and evaluates significant environmental, social, and corporate governance issues through reviewing domestic and foreign research reports, literature, and integrating assessment data from various departments and subsidiaries. It then formulates effective risk management policies and takes specific action plans for identification, measurement, assessment, supervision, and control to reduce the impact of relevant risks. The committee regularly (at least once a year) consolidates and reports on the company's risk management execution status. In 2024, the chairman	Relevant

Implementation Item	Current progress:			Deviations from the Sustainable Development Best Practice Principles for TWSE/TPEx Listed Companies, and the reason for such deviations
	Yes	No	Summary	
			(the highest executive of the Sustainable Development Committee) reported to the board of directors twice on the execution status of risk management, including the results of risk assessments in various aspects, and explained the control and supervision procedures for higher-risk aspects. Furthermore, based on the assessed risks, relevant risk management policies or strategies are formulated. For details, please refer to section 6.7.	
3. Environmental topics (1) Does the company establish an environmental management system appropriate for the nature of its industry?	●		E Ink's global operations centers have gradually obtained ISO 14001 Environmental Management System certification and third-party external verification, and the company continues to invest in environmental improvement management programs. In 2024, all Taiwan facilities achieved 100% certification under this management system, with a global certification coverage rate of 75%.	Relevant
(2) Does the company commit to improving energy efficiency and the use of renewable materials with low environmental impact?	●		The company continues to implement improvement initiatives for waste reduction in manufacturing processes and energy conservation. High-efficiency, low-energy-consuming equipment is prioritized for production and facility operations. Additionally, process raw materials and chemicals are recovered and refined by the original suppliers for reuse, enhancing environmental, health, and safety performance. For reusable packaging materials and resources, the company prioritizes supplier take-back programs. If direct reuse is not feasible, materials are recycled through appropriate channels. Incineration is considered only when thermal recovery can be achieved. In 2024, E Ink's Taiwan facilities implemented the UL 2799 Zero Waste to Landfill certification program, with certification expected by 2025.	Relevant
(3) Does the company assess potential risks and opportunities associated with climate change, and adopt mitigating measures?	●		Based on the scenarios published by the International Energy Agency (IEA), including the Net Zero Emissions by 2050 Scenario (NZE) and the Stated Policies Scenario (STEPS), as well as the Intergovernmental Panel on Climate Change (IPCC) scenarios such as SSP1-2.6 and SSP5-8.5, and through research on internal and external stakeholder surveys, international research reports, and industry trends both domestically and internationally, E Ink has identified potential physical risks, transition risks, and opportunities arising from the impacts of climate change. We have analyzed the probability and potential impacts of the identified risks and opportunities and evaluated appropriate response measures to address these risks, thereby formulating relevant climate change strategy guidelines. As a result, the company has identified the key climate change risks, with transition risks including low-carbon technology and process transformation, achieving net-zero	Relevant

Implementation Item	Current progress:			Deviations from the Sustainable Development Best Practice Principles for TWSE/TPEx Listed Companies, and the reason for such deviations
	Yes	No	Summary	
			carbon emissions, low-carbon product competitiveness, and rising raw material (including electricity) costs. The physical risks involve increased severity of extreme weather events. The corresponding response and management measures include: ensuring regulatory compliance, actively seeking green energy sources, establishing self-owned power generation systems that comply with regulations for self-consumption, regularly conducting pipeline maintenance, enhancing emergency response drills, upgrading and maintaining equipment, supply chain risk management, setting up alternative supply sources, continuously monitoring market information to increase market sensitivity, and adjusting strategies to reduce risks. Additionally, climate change opportunities include the expansion of new market applications for e-paper products, increased demand for environmentally friendly products, enhanced low-carbon product development capacity, and promoting low-carbon green production. The corresponding response and management measures include: expanding e-paper design and applications, innovating R&D to replace motors with energy-saving versions, reducing water leakage facilities, recycling and reusing chemicals, and collaborating with suppliers to recycle chemicals and packaging materials.	
(4) Does the company maintain statistics on greenhouse gas emission, water usage and total waste volume in the last two years, and implement policies aimed at reducing energy greenhouse gas, water and waste?	●		At E Ink, we take environmental protection topics very seriously. We strive to practice pollution control and reduce the consumption of energy resources. An environmental safety and health management policy has been put in place with an annual management plan for water supply increase, wastewater recycling, energy conservation, heat recovery, waste reduction, and recycling programs. GHG and product carbon footprint audits are also conducted in response for the sake of energy efficiency and carbon reduction. The scope of the audits includes all E Ink Taiwan, the primary production sites of overseas subsidiaries, and office locations. ● Third-party certification of ISO 14001 environmental management system has been obtained. ISO 14064-1 GHG emission inventories are conducted annually with third-party verification and verification statement. All sites in Taiwan have also introduced and obtained ISO 50001 energy management system certification. ● Statistics on all environmental data (GHG emissions, electricity usage, water usage, waste, emissions etc.) are collected, analyzed and fully disclosed. Tailored management targets and initiatives were also set for each plant with regular follow-ups and disclosure of their outcomes. In alignment with government energy conservation and carbon reduction policies and	Relevant

Implementation Item	Current progress:			Deviations from the Sustainable Development Best Practice Principles for TWSE/TPEx Listed Companies, and the reason for such deviations
	Yes	No	Summary	
			regulations, E Ink implements energy-saving and carbon reduction initiatives annually. The company has established energy conservation targets and execution plans with significant results. In 2024, the energy-saving initiatives at Taiwan facilities achieved an electricity savings rate of approximately 4%. E Ink demonstrates its commitment to green energy and carbon reduction through power purchase agreements (PPA) and regional energy attribute certificates (EAC). In 2024, the company's global facilities reached RE58, while Taiwan facilities achieved RE21. Key environmental data, including greenhouse gas emissions, water consumption, and total waste volume, along with policies for reducing emissions, water use, and waste management, are fully disclosed in the annual Corporate Sustainability Report and the ESG section of the company website. Each year, the Corporate Sustainability Report undergoes assurance verification by an independent third-party professional organization.	
4. Social topics (1) Has the Company established relevant management policies and procedures in accordance with applicable laws and the International Convention of Human Rights?	●		E Ink strictly adheres to the laws and regulations of the regions where its global operations are located and follows internationally recognized human rights standards, including the International Bill of Rights and the ILO Declaration on Fundamental Principles and Rights at Work, to prevent human rights violations. The company is committed to treating all employees—current staff, contract and temporary workers, interns, etc.—with dignity and respect. In terms of employee hiring, management, and development, E Ink complies with labor laws and regulations, including the Labor Standards Act, and is committed to respecting human rights policies. In 2024, E Ink conducted human rights risk assessments following due diligence procedures in regions including Taiwan (Hsinchu and Linkou plants), Mainland China, and key suppliers. A total of six human rights risks were identified, and corresponding mitigation and remediation measures were developed. The company closely monitors and ensures the continuous improvement of its management mechanisms. Regarding preventive measures, all new employees in Taiwan must undergo human rights policy training as part of their onboarding. In 2024, 11 training sessions were conducted, with a total of 103 new employees completing the training. Additionally, a "Sexual Harassment Prevention Training Course" was provided to current IDL employees in 2024, with 837 employees completing the course. The total human rights-related training hours for 2024 amounted to 483.95 hours.	Relevant
(2) Does the company define and implement reasonable employee welfare measures (including compensation, leave	●		E Ink provides sound remuneration, carefully thought-out benefits and a high-quality living environment. We cultivate a friendly working environment to help employees	Relevant

Implementation Item	Current progress:			Deviations from the Sustainable Development Best Practice Principles for TWSE/TPEx Listed Companies, and the reason for such deviations
	Yes	No	Summary	
of absence and other benefits), and does employee compensation properly reflect business performance or results?			maintain their work-life balance. A corporate culture based around employee accountability, teamwork and innovation is emphasized at E Ink. We value the contribution of every employee. The standard of compensation and benefits are regularly reviewed against local laws and market standards to design fair and competitive compensation for each position. We provide starting salaries that exceed the local minimum wage for all new employees. Nor do we discriminate on the basis of gender, race, religion, political affiliation, marital status, or membership of unions/community associations in compensation. To attract and retain quality talent, we offer performance and annual bonuses linked to business results and individual performance based on the principle of profit-sharing. E Ink considers employees to be our most important asset. We seek to offer a sound working environment, compensation and benefits for every employee around the world. There are also incentive mechanisms to reward employee contribution. According to the TWSE Market Observation Post System, employee compensation has kept pace with the Company's growing profits each year. Average salaries were all higher than our peers in the industry. Employ stock options were designed and stock recognition rules were passed by E Ink to realize the goal of incentivizing employees and their retention. Employee performance is linked to the Company's business activities in the hopes of sharing the fruits of success with employees. In addition to providing a safe, comfortable, and people-friendly working environment, employee health is a priority for E Ink as well. Regular employee health exams, cultural and educational seminars, company holidays, family days, and a wide variety of club activities are held at various times to enhance employees' quality of life.	
(3) Has the Company provided a safe and healthy work environment for employees, and related education on occupational safety and health for employees at regular intervals?	●		Each quarter, the company conducts a review through the committee to assess plant management policies, regulatory compliance, and effectiveness. The primary goal is to create a good working environment where employees can work with peace of mind. Regular testing of harmful substances in the workplace is carried out as required by law, and appropriate personal protective equipment (PPE) is provided to ensure a comfortable and healthy work environment. In Taiwan, special hazardous tasks, such as those involving hexane, lead, and nickel, are identified under the "Labor Health Protection Regulations." Special physical examinations are conducted in compliance with regulations, and special health management measures are implemented based on the company's employee health management policy. Occupational health specialists visit the plant to understand the risks posed by the work environment and offer improvement suggestions. In addition,	Relevant

Implementation Item	Current progress:			Deviations from the Sustainable Development Best Practice Principles for TWSE/TPEx Listed Companies, and the reason for such deviations
	Yes	No	Summary	
			despite the pandemic, the company continues to prioritize the prevention of special work hazards through online training courses, allowing employees to flexibly adjust training schedules. The training, delivered by specialists, helps employees learn how to prevent and avoid workplace hazards. Occupational safety and health (OSH) training is incorporated into new employee onboarding and general education courses. These trainings provide essential safety and health education and training necessary for work and disaster prevention, fostering a culture of safety awareness and reducing accidents caused by unsafe behavior. To address the growing number of foreign employees, the company has enhanced OSH training using videos from the Occupational Safety and Health Administration and relevant operational information, with posters in English and Indonesian to improve training effectiveness. In 2024, 11 OSH education sessions were conducted, with 485 employees trained. The introduction of online courses also provided employees with flexible options for receiving safety education. E Ink is dedicated to creating a dignified, friendly, healthy, and happy working environment, taking concrete actions to care for employees' physical and mental well-being. The company follows a three-stage, five-level preventive concept and a continuous improvement model, planning regular health check-ups and health promotion activities to provide employees with the best care. In 2024, 265 employees participated in on-site doctor consultations, and 10 health promotion seminars were held to help employees better understand health risks. To improve employee health and actively prevent obesity, hypertension, diabetes, and other chronic diseases, the company is fully committed to promoting a health enhancement program. This program includes regular health checkups, weight management plans, regular exercise, balanced diets, smoking cessation, and stress relief activities. It also integrates online apps, fitness courses, and nutritional guidance to enhance employees' health awareness. In 2024, a total of 353 employees participated in the weight management program, successfully losing 453 kilograms. The rate of overweight abnormalities decreased from 63% to 47%, with an improvement of 15%. These achievements not only helped employees reach their health goals but also earned the company the "Excellence Award" in the 2024 Workplace Health and Weight Management Competition, with a successful smoking cessation rate of 66.6%.	

Implementation Item	Current progress:			Deviations from the Sustainable Development Best Practice Principles for TWSE/TPEx Listed Companies, and the reason for such deviations
	Yes	No	Summary	
			• E Ink has implemented the ISO 45001 Occupational Health and Safety Management Standard (The validity period: From June 30, 2023, to June 30, 2026.) to strengthen the governance of the occupational safety system, with the Board of Directors overseeing its management. • In 2024, the company reported one occupational injury (not classified as a major occupational accident) with one injured person. No major occupational accidents were reported by the Ministry of Labor. Additionally, there were no injury records for other workers, such as contractors or interns. • In 2024, the company's employee injury frequency rate (FR) was 0.37, and the severity rate (SR) was 2, both lower than the average for Taiwan's electronic component manufacturing industry (FR = 0.90, SR = 29). The injury rates for contractors remained at zero. • The company did not experience any fire incidents in 2024, with zero fatalities and injuries. To further reduce potential risks in the work environment, the company will continue to implement improvement measures and tiered control, aiming for a zero-accident workplace.	
(4) Does the company implement an effective training program for employees to develop their career skills?	●		In terms of employee training, the company emphasizes global talent development through systematic core competency planning. Since 2020, we have established E Ink Global University to design diverse and foundational training courses, providing training and learning resources for all global E Ink employees. Through the global online learning platform (E Ink University), we manage knowledge and tailor appropriate educational and training courses based on employees' roles and levels, thereby enhancing overall competitiveness. In 2021, E Ink completed the establishment of the professional job map, which now includes 95 job roles and 326 corresponding professional courses. This initiative promotes knowledge transfer and creates an environment that encourages continuous learning. As a result of these efforts, in 2024, employees participated in a total of 8,857 internal training sessions, accumulating 19,111.06 hours of training. The total number of training sessions conducted exceeded 532. The average satisfaction rating for online courses was 94.6%, while the average satisfaction for in-person courses was 95%.	Relevant
(5) Does the company comply with laws, regulations and international standards with respect to customer health, safety and privacy, marketing and labeling in all products and services offered, and implement consumer protection	●		Our company's products comply with international standards and meet customer requirements, while our internal and external business operations strictly adhere to ethical conduct guidelines. Building on this foundation, our Board of Directors approved the Sustainability and Social Responsibility Code on December 19, 2019, further	Relevant

Implementation Item	Current progress:			Deviations from the Sustainable Development Best Practice Principles for TWSE/TPEx Listed Companies, and the reason for such deviations
	Yes	No	Summary	
policies and complaint procedures?			strengthening our commitment to sustainable management and social responsibility. To enhance customer satisfaction and address customer feedback and complaints, we regularly conduct customer satisfaction surveys. Based on these surveys, we optimize our services, further strengthening customer relationships and ensuring long-term, stable cooperation with our clients. (1) Operating processes have been defined for every Company department. An internal quality assurance department has also been established to protect the rights of customers. Customer satisfaction surveys and feedback are used to understand the needs of customers and provide a reference for continuous improvement. This increases customer satisfaction by ensuring products meet customer requirements. Regular customer visits and review meetings are also held to keep the channels for communication open and ensure that customer requirements are fully understood. A monitoring system has also been implemented to ensure that the quality of products and serves meets customer expectations. (2) The Company strives to ensure that the components, parts, raw materials and packaging used by company products do not contain environment-related substances such as restricted substances or conflict minerals in order to comply with existing laws and regulations, satisfy customer requirements, protect the Earth's environment, and alleviate their impact on the ecosystem. Raw materials from suppliers are therefore required to conform with the following rules: 1.Registration, Evaluation, Authorization and Restriction of Chemicals (EU REACH) 2. Directive of Waste Electronic and Electrical Equipment (EU WEEE) 3. Directive of the Restriction of Hazardous Substances (EU RoHS) 4. No use of conflict minerals 5. The quality policy and objective of the Company in products and environment (established in accordance with applicable international legal rules and regulations and customer needs).	
(6) Does the company implement a supplier management policy that regulates suppliers' conducts with respect to environmental protection, occupational safety and health or work rights/human rights issues, and track suppliers' performance on a regular basis?	●		Our company has established the "E Ink Supplier Code of Conduct" which consists of five parts: labor, health and safety, environment, business ethics standards, and management elements. It requires all new suppliers to sign the "E Ink Supplier Code of Conduct Commitment Letter" committing to ensuring that all employees in the E Ink supply chain are respected, work in a safe environment, fulfill environmental	Relevant

Implementation Item	Current progress:			Deviations from the Sustainable Development Best Practice Principles for TWSE/TPEx Listed Companies, and the reason for such deviations
	Yes	No	Summary	
			responsibilities in business operations, and adhere to ethical standards. Furthermore, to achieve the goal of a sustainable supply chain for E Ink (including its subsidiaries), our company has formulated and publicly disclosed the "Supply Chain Policy," which sets three major sustainable actions (1) controlling sustainable risks in the supply chain, (2) creating a green and low-carbon supply chain, and (3) improving supply chain resilience. Through supply chain assessment and audit systems, we manage the supply chain to reduce the risk of supply chain disruptions and effectively implement sustainable supply chain management. Our company's supplier evaluation management process has incorporated considerations such as environmental occupational health and safety management systems, environmental impact assessments, health and safety, labor practices assessments, and social assessments into corporate social responsibility issues. New suppliers must pass the evaluation of the aforementioned corporate social responsibility items, and regular audits and counseling are also arranged for existing suppliers. For suppliers that cause significant negative social impacts, this will be specifically highlighted in the evaluation form and used as a reference for order transactions, audits, and other behaviors towards that supplier. At the same time, assessments will be made of suppliers' financial, environmental, and social risks to address them early and reduce the risk of supply chain disruptions. Under the supplier evaluation process, the purchasing unit must research prospective new suppliers and conduct a risk assessment. Supplier quality and punctuality must then verified to determine whether they can become a qualified supplier. Other units can then determine whether to engage in further cooperation. E Ink’s management of new and old suppliers are based on standard evaluation procedures that serve as a guide for the development, evaluation and qualification of suppliers. Annual audits and quarterly assessments are conducted for long-term suppliers of raw materials to improve their manufacturing technology, quality standard, and management ability as well as reduce costs. Such cooperation represents a win-win outcome for the continuity of the Company's raw materials supply. In 2024, a total of 31 suppliers were audited, including 7 new suppliers and 24 existing suppliers. All of them passed the assessment and were rated as qualified suppliers. During the audit process, no suppliers were identified as having significant actual or potential negative impacts, and therefore no further follow-up was required. The average score for the 2024 supplier audits was 86 points, and 100% of new suppliers passed the standard selection process.	

Implementation Item	Current progress:			Deviations from the Sustainable Development Best Practice Principles for TWSE/TPEx Listed Companies, and the reason for such deviations
	Yes	No	Summary	
5. Does the company prepare a sustainability report or any report for disclosure of non-financial information based on international reporting standards or guidelines? Are the aforementioned reports supported by assurance or opinion of a third-party certifier?	●		The report has been prepared in accordance with the Global Reporting Initiative (GRI) Standards 2021 edition. It also follows the sustainability accounting standards (SASB Standards) set by the International Financial Reporting Standards (IFRS) Foundation and identifies climate-related risks and opportunities according to the framework of the Task Force on Climate-Related Financial Disclosures (TCFD) established by the Financial Stability Board (FSB). The report has been verified by BSI (British Standards Institution) Taiwan Branch under the AA1000 Assurance Standard V3, Type 2 - Moderate Assurance level. The financial information presented in this report is consistent with E Ink's 2024 consolidated financial report, which has been audited by Deloitte & Touche.	Relevant

6. If the company has established sustainability principles in accordance with "Sustainable Development Best Practice Principles for TWSE/TPEX Listed Companies," please describe its current practices and any deviations from the Best Practice Principles:
The relevant systems and regulations have been defined by the Company and duly implemented in the spirit of CSR.

7. Other information useful to understanding the implementation of sustainable development:

I. Awards, Certifications, and Assessments

(1) SUSTAINALYTICS ESG Risk Rating of 17.2 – Low Risk
(2) MSCI ESG Rating of AA
(3) 2024 EcoVadis Sustainability Rating – Silver Medal
(4) Taiwan Sustainability Rating – AAA Level
(5) 2024 Taiwan Golden Root Award and Special Contribution Award
(6) 2024 Presidential Innovation Award
(7) 2024 Bronze Award at the Taipei Golden Eagle Microfilm Festival
(8) In 2024, E Ink completed the CDP questionnaire for two categories, receiving an A List (Leadership Level) in Climate Change and an A- (Leadership Level) in Water Security
(9) Ranked in the top 5% of OTC-listed companies in the 2023 Corporate Governance Evaluation
(10) Dark Sky Certification from the International Dark-Sky Association
(11) ISO 20400 Sustainable Procurement – “Advanced” Certification by SGS
(12) 2024 Global Views ESG Corporate Sustainability Award – ESG Overall Performance, Model Award for the Electronics and Technology Industry
(13) Ranked 5th in the Large Enterprise Manufacturing Category of the "CommonWealth Magazine Sustainability Top 100"
(14) Selected in the 2024 "CommonWealth Talent Sustainability Award" under the Large Enterprise Manufacturing Category
(15) 2024 Taiwan Sustainability Action Awards (TSAA): Gold Awards for SDG 03 (Good Health and Well-being) and SDG 13 (Climate Action)
(16) 2024 Asia-Pacific and Taiwan Sustainability Action Awards (APSAA): Gold Awards for SDG 03 (Good Health and Well-being) and SDG 4 (Quality Education)
(17) 2024 Taiwan Corporate Sustainability Awards (TCSA):

- Top 10 Sustainability Model Enterprises in Taiwan

Implementation Item	Current progress:			Deviations from the Sustainable Development Best Practice Principles for TWSE/TPEx Listed Companies, and the reason for such deviations
	Yes	No	Summary	

- Sustainability Report – Platinum Award in the Electronic Information Manufacturing Category (Type 1)
- Individual Sustainability Performance Awards: Innovation Growth Leadership Award, Climate Leadership Award, Sustainable Supply Chain Leadership Award, Talent Development Leadership Award, Workplace Well-being Leadership Award

(18) 2024 Global Corporate Sustainability Awards (GCSA) – Bronze Award
(19) 2024 Healthy Enterprise Citizen Award
(20) Recognized by the Health Promotion Administration, Ministry of Health and Welfare for promoting workplace health initiatives and improving employee health, winning the "Excellence Award" in the Workplace Health Body Composition Competition
(21) Selected as a component stock of the 2024 Dow Jones Sustainability World Index (DJSI-World) and Dow Jones Sustainability Emerging Markets Index (DJSI-Emerging Markets)
(22) Listed among the top 1% of companies in the Electronic, Equipment, and Component Industry in the 2024 S&P Sustainability Yearbook
(23) Included as a constituent stock in the MSCI Global Standard Indexes
(24) Included in the FTSE Emerging Markets Sustainability Index, with green revenue accounting for 99.9%
(25) In 2024, E Ink's Yangzhou Plant obtained UL 2799 Zero Waste to Landfill Gold Level Certification, and the Linkou Plant obtained the UL 2799 Platinum Level Certification in January 2025
(26) In 2024, E Ink passed the ISO 37001 Anti-Bribery Management System Certification and received certification from BSI (British Standards Institution), becoming the first company in the display industry to receive this certification
(27) E Ink is the first company in Taiwan and the Asia-Pacific region to receive an independently verified Moody's Ratings score of SQS2 (Very Good), the highest rating awarded under the updated Second-Party Opinion methodology for green financing structures in Greater China since October 2022

II. Domestic and International Initiatives

(1) The first display company to join the RE100 global renewable energy initiative, committing to 100% renewable energy use by 2030
(2) The first Taiwanese company to sign the Taiwan Climate Pledge (TCP), aiming for net-zero carbon emissions by 2040
(3) Passed the Science Based Targets initiative (SBTi) review in 2023
(4) The first display manufacturer globally to join EP100, committing to implement ISO 50001 energy management systems across all global manufacturing sites by 2030 and to double energy productivity by 2040 compared to the 2018 baseline year
(5) Joined the "Race to Zero" campaign under the United Nations Framework Convention on Climate Change (UNFCCC), committing to achieve net-zero carbon emissions by 2040
(6) Advocate for voluntary climate-related financial disclosures as a Task Force on Climate-related Financial Disclosures (TCFD) Supporter
(7) Member of the United Nations Global Compact (UNGC)
(8) Participates in the "Temperature Rising Index for Pathways," Taiwan's first carbon disclosure platform initiated by CommonWealth Magazine in collaboration with academia, committed to carbon reduction goals
(9) Member of "TALENT, in Taiwan" – Taiwan Talent Sustainability Action, committed to six major indicators for talent sustainability: "Purpose and Value," "Diversity and Inclusion," "Organizational Communication," "Reward and Incentive," "Physical and Mental Health," and "Talent Development" to maintain sustainable competitiveness

[Support Green Energy]

Since 2015, E Ink has cumulatively purchased 2.66 million kWh of green electricity over a three-year period. Beginning in 2017, the Company promoted the certification and trading of Taiwan Renewable Energy Certificates (T-RECs), accumulating a total of 1,917 certificates — the highest number of T-REC transactions among all companies at the time, accounting for 21.28% of the total market volume.

Implementation Item	Current progress:			Deviations from the Sustainable Development Best Practice Principles for TWSE/TPEx Listed Companies, and the reason for such deviations
	Yes	No	Summary	
In 2020, E Ink entered into power purchase agreements (PPAs), becoming part of the first wave of companies in Taiwan to procure green electricity through such agreements. In 2022, E Ink joined the RE100 initiative, becoming the first display company to pledge 100% renewable energy usage by 2030. Following approval by the Science Based Targets initiative (SBTi) in 2023, E Ink achieved RE58 globally (with RE21 in Taiwan) across all manufacturing sites in 2024, demonstrating the Company's steadfast commitment to supporting green power, energy efficiency, and carbon reduction, actively moving toward the net-zero goal.				

2.2.7 Enforcement of business integrity, deviation and causes of deviation from Ethical Corporate Management Best Practice Principles for TWSE/TPEX-Listed Companies

Items for evaluation	The pursuit			Variation with the Ethical Corporate Management Best Practice Principles for TWSE/TPEx-listed Companies
	Yes	No	Summary	
1. Establishment of the Ethical Corporate Management Policy and Action Plan				
(I) Has the company established a set of board-approved business integrity policy, and stated in its Memorandum or external correspondence about the policies and practices it implements to maintain business integrity? Are the board of directors and the senior management committed to fulfilling this commitment?	v		The Company duly observes the Company Act, other applicable legal rules governing companies listed at TWSE and TPEx, and other laws governing commercial behaviors as the prerequisites for the implementation of ethical corporate governance.	Relevant
(II) Has the company developed systematic practices for assessing dishonesty risks? Does the company perform regular analyses and assessments on business activities that are prone to higher risk of dishonesty, and implement preventions against dishonest conducts that include at least the measures mentioned in Paragraph 2, Article 7 of "Ethical Corporate Management Best Practice Principles for TWSE/TPEX Listed Companies"?	v		As stated in the internal control system and "Code of Conduct and Operating Procedures for Integrity" of the Company, Directors, employees and the parties with de facto control, shall not directly or indirectly offer, promise, request or accept unjustified benefits in any form in the pursuit of business integrity, including kickbacks, commissions, finder's fee, or offers or accept unjustified benefit from customers, agents, contractors, suppliers, public officials, or other stakeholders in any other means.	Relevant
(III) Has the company defined and enforced operating procedures, behavioral guidelines, penalties and grievance systems as part of its preventive measures against dishonest conducts? Are the above measures reviewed and revised on a regular basis?	v		The Business Integrity Code of Conduct was established by the company setting out the operating procedures, behavior guidelines, penalties for violations, and grievance mechanism. It is published on the corporate website (external) and employee intranet (internal).	Relevant
2. Integrity in business operation				
(I) Has the Company conducted assessment on the record of integrity of the counterparties and inscribed the integrity clause in the contracts binding the Company and the counterparties?	v		The Company engaged in business operation in fairness and transparency. Before proceeding to business transaction, the Company will consider the legality of the counterparties of trade, and if there is any record of unethical practice to avoid business transactions with parties having a record of unethical practice. Transaction counterparties are also asked to sign a Letter of Undertaking on Integrity to ensure ethical transactions between the two parties.	Relevant
(II) Does the company have a unit that enforces business integrity directly under the board of directors? Does this unit report its progress (regarding implementation of business integrity policy and prevention against dishonest conducts) to the board of directors on a regular basis (at least once a year)?	v		HR Central Division is the competent unit responsible for the promotion of integrity management policy, education and training, receiving and processing of complaints at the Company. A periodic report (once a year) is made to the board on the measures for ethical management and prevention of unethical behavior, and the supervision of implementation. A report was presented to the board on December 13, 2024.	Relevant
(III) Has the Company made the policy for the prevention of the conflict of interest, provided appropriate channel for reflection, and properly pursued such policy?	v		Directors and officers should recuse themselves from any conflicts of interests. The board's conflict of interest operations should be recorded in the annual report and the employee complaints mailbox (Appeal@eink.com) used for appeals.	Relevant
(IV) Has the company implemented effective accounting policy and internal control system to maintain business integrity? Has an internal or external audit unit	v		The Company has established an effective internal control system and accounting system to assure the effective design and implementation of the	Relevant

Items for evaluation	The pursuit			Variation with the Ethical Corporate Management Best Practice Principles for TWSE/TPEx-listed Companies
	Yes	No	Summary	
been assigned to devise audit plans based on the outcome of integrity risk assessment, and to audit employees' compliance with various preventions against dishonest conduct?			system. The Company has also appointed CPAs to conduct annual review and amendment to the system jointly with the auditors, and the implementation of corporate governance so as to establish sound mechanisms for corporate governance and risk control.	
(V) Has the Company provided internal and external trainings on topics of ethical corporate management at regular intervals?	v		The Company has established the "Procedures for Ethical Corporate Management Best Practice Principles." In addition to strictly requiring all employees to comply with these regulations, the Company also strengthens awareness through related training courses on anti-corruption, anti-competitive behavior, code of conduct, responsibilities and authority, whistleblowing procedures, and trade secret protection. In 2024, a total of 5,247 participants completed these training sessions, with a cumulative total of 3,312.62 training hours. In addition to conducting regular training programs each year, the Company also promotes updates on relevant laws and regulations to all employees on an ongoing basis through internal website announcements and email notifications. In the second quarter of 2024, the Company issued an internal announcement to reinforce its ethical corporate management policy, ensuring its effective implementation throughout the organization.	Relevant
3. The reporting system of the Company in action				
(I) Has the Company established the system for reporting and rewards for the informants, and the channels for facilitating the reporting of unethical practices, and appointed appropriate personnel to conduct investigation on the suspects reported by the others?	v		Reports from internal (external) personnel on improper conduct of business, corruption, and graft, violation of company operating procedures, as well as recommendations on business improvements received by the Company are investigated by HR Central Division.	Relevant
(II) Has the company implemented any standard procedures for handling reported misconducts, and subsequent actions and confidentiality measures to be undertaken upon completion of an investigation?	v		Article 5 of the Company "Business Integrity Code of Conduct" detail the standard operating procedure for investigating whistle blower complaints, the measures to take once the investigation is completed, and the associated confidentiality mechanism.	Relevant
(III) Has the Company established related policies for the protection of the informants from undue treatment?	v		Article 5 of the Company "Business Integrity Code of Conduct" detail the standard operating procedure for investigating whistle blower complaints, the measures to take once the investigation is completed, and the associated confidentiality mechanism.	Relevant
4. Information Disclosure				
Has the company disclosed its integrity principles and progress onto its website and MOPS?	v		The company has provided annual report information on its official website and the Market Observation Post System (MOPS), disclosing the content and implementation results of the Code of Integrity Management. For more information,	Relevant

Items for evaluation	The pursuit			Variation with the Ethical Corporate Management Best Practice Principles for TWSE/TPEx-listed Companies
	Yes	No	Summary	
			please refer to: https://tw.eink.com/investor/governance?bookmark=integrity.	

5. If the company has established business integrity policies in accordance with "Ethical Corporate Management Best Practice Principles for TWSE/TPEX-Listed Companies," please describe its current practices and any deviations from the Best Practice Principles:

The Company has implemented its "Business Integrity Code of Conduct" following board of directors' approval dated 2019.12.19. All systems and policies introduced in relation to business integrity are in alignment with integrity principles and have been enforced accordingly.

6. Other information useful to the understanding of integrity in business dealings:

【Implementation of ISO 37001 Anti-Bribery Management System】

In the first quarter of 2024, our company launched the ISO 37001 Anti-Bribery Management System certification program, covering all departments. Through the collaboration of all employees, we completed comprehensive departmental responsibilities and bribery risk assessments, established relevant systems, and conducted internal training. After a thorough trial operation and audit, the company officially passed the certification in the fourth quarter of 2024 and received the certificate from the British Standards Institution (BSI) on January 7, 2025. The certification is valid for three years and will undergo regular reviews every September. In 2025, we will implement an online system for departmental responsibilities and bribery risk assessment forms to effectively strengthen our internal risk management against bribery and unethical behavior.

Our company is committed to integrity-based management and has clearly established an integrity management code and a supplier conduct code. We always operate in accordance with the principles of honesty and integrity in all business activities. We firmly oppose corruption and bribery and enforce a "zero tolerance" policy. Any violations will result in decisive actions, and we will uphold the standards of honesty, fairness, accuracy, and transparency in fully implementing the company's commitments and actions.

Building upon the ISO 37001 Anti-Bribery Management System, our company has further refined its business interaction norms, covering directors, managers, employees, suppliers, and customers, as all business partners. We apply the highest standards in implementing anti-corruption and anti-bribery regulations, establishing three lines of defense through daily operations management, compliance oversight, and audit governance to strengthen risk management and minimize the risks associated with integrity-based operations.

Our company is dedicated to becoming a model of integrity-based management in the industry. Through international certification, we aim to further strengthen our leadership position in the global market and ensure compliance with the regulatory requirements of various countries.

2.2.8 The implementation of ethical corporate management and policies: E Ink educate employees the value of business ethics from time to time for strengthening the moral idea of integrity and anti-corruption to all and provide related training to demand all to observe the code of conduct. Any offense against the ethical norm shall be punished in accordance with the internal rules and regulations of the Company.

2.2.9 Any other vital information that helps to understand the performance of corporate governance of the Company shall also be disclosed: refer to Section 6.5-6.9

2.2.10 The following shall be disclosed in the pursuit of internal control system:

1. Declaration of Internal Control: https://mopsov.twse.com.tw/mops/web/t06sg20
2. If CPAs are retained to audit the internal control system, disclose the Auditors' Report: none.

2.2.11 Major resolutions of the Shareholders Meeting and the Board in the most recent year to the date this reported was printed: refer to Section 6.5.

2.2.12 Adverse opinions of the Directors or Supervisors on motions passed by the Board on record or in written declaration in the most recent year to the date this report was printed, and the content of the opinions: none.

2.2.13 Climate-Related Information of Listed Companies

1. Implementation Status of Climate-Related Information

Project	Implementation Status
1. Describe the supervision and governance of the board of directors and management on climate-related risks and opportunities.	The Board of Directors of E Ink serves as the highest governing body for risk management, with the Chairman acting as the chairperson. The Board regularly approves the management strategies for climate-related risks and opportunities and oversees the effectiveness of the overall risk management framework. Functional committees within the Board are responsible for reviewing the company's climate-related risk policies and procedures, making decisions on key climate-related issues, allocating resources, and assessing the linkage between executive compensation and climate-related matters. The management-level Corporate Sustainability Committee reviews strategies, goals, and effectiveness tracking for addressing climate-related risks. The Risk Management Group follows established policies and procedures to define risk control priorities and monitors the management of climate-related risks. The Green Manufacturing Group is responsible for executing and managing actions related to climate change risks and opportunities, including identifying and assessing climate-related risks and opportunities, conducting strategy and financial impact analyses, developing management plans for significant risk items, setting indicators and targets, and reviewing implementation status and future plans.
2. Describe how the identified climate risks and opportunities affect the company's business, strategy, and finances (short-term, medium-term, long-term).	In accordance with the TCFD framework, E Ink has conducted a cross-departmental assessment of short-, medium-, and long-term risks, opportunities, and potential financial impacts across the company's value chain (including operations, upstream, and downstream). This assessment includes an analysis of the significant climate-related risks and opportunities and their potential impacts on business, strategy, and financial planning. E Ink defines short-term as within 5 years, medium-term as 5 to 10 years, and long-term as beyond 10 years. Using climate change risk and opportunity assessment tools, we identify the significant climate-related risks and opportunities. The significant climate-related risks identified for 2024 include five factors: low-carbon technology and process transformation, achieving net-zero carbon emissions, low-carbon product competitiveness, rising raw material (including electricity) costs, and increased severity of extreme weather events (e.g., typhoons, flooding, landslides). The opportunities identified include four factors: expanding e-paper product applications in new markets, increased market demand for environmentally friendly products, promoting low-carbon green production, and enhancing low-carbon product development capacity. The subsequent management strategies include planning a net-zero carbon emission pathway, improving energy efficiency, increasing the share of renewable energy usage, collaborating with industry, government, and academia to develop energy-saving products, managing the supply chain, focusing on negative-carbon technologies, and purchasing carbon credits, all aimed at reducing the impacts of climate change.
3. Describe the financial impact of extreme weather events and transition actions.	E Ink considers the net-zero carbon emissions target and scenarios where no active carbon reduction management is implemented (Business as Usual, BAU) to estimate the company's future carbon emissions. Through the analysis of the International Energy Agency (IEA) scenarios, including the Stated Policies Scenario (STEPS) and the Net Zero Emissions Scenario (NZE), the potential carbon pricing impacts in Taiwan, Mainland China, and the United States are assessed. To address the potential high carbon pricing impacts in the future, E Ink will continue to plan the use of low-energy consumption equipment and implement carbon reduction projects to effectively reduce electricity and energy consumption in the manufacturing process. In terms of energy usage, the company will continue purchasing green energy and consider expanding solar panel installations at its

Project	Implementation Status
	facilities to increase the share of renewable energy usage. This approach aims to reduce carbon emissions while also minimizing environmental impacts. Additionally, E Ink also considers the climate scenarios published by the Intergovernmental Panel on Climate Change (IPCC), including SSP1-2.6 and SSP5-8.5, to assess the potential financial impacts on the value chain caused by disruptions in operations due to extreme weather events (e.g., flooding, landslides).
4. Describe how the process of identifying, assessing, and managing climate risks is integrated into the overall risk management system.	E Ink plans to evaluate climate-related risks and opportunities based on the TCFD framework and industry assessments every three years. This will be done in conjunction with emerging climate change regulations and interdepartmental communication. The Risk Management Group will review potential strategic, operational, financial, informational, legal compliance, integrity, and emerging risks associated with the company's operations on an annual basis. They will identify and manage these risks. Subsequently, the Green Manufacturing Group will coordinate the development of adaptation and mitigation strategies. The Green Manufacturing Group will also assess the financial impact of significant climate-related risks and risk items every six months. Additionally, they will report on the management status of these risks to the Corporate Sustainability Committee on an annual basis. **<u>Risk Identification:</u>** •Convene cross-departmental responsible units for disclosing climate-related financial information. •Identify short-, medium-, and long-term climate-related risks and opportunities according to the TCFD framework. **<u>Risk Analysis:</u>** •Calculate the risk level based on the impact and frequency of risks on the value chain and create a matrix of climate-related risks and opportunities. **<u>Risk Assessment:</u>** •Risks and opportunities with a risk level ≥9 are classified as significant climate-related risks and opportunities. •Integrate significant climate-related risks and opportunities into the company's overall risk management and prioritize their management
5. If using scenario analysis to assess resilience to climate change risks, describe the scenarios, parameters, assumptions, analysis factors, and major financial impacts used.	E Ink analyzes the potential financial impacts on operational costs and capital expenditures under different scenarios. The details of each risk scenario and its assumptions are as follows: **Transition Risks:** **IEA STEPS (Stated Policies Scenario):** • This scenario covers the existing climate change measures and policies already established by governments, with a more conservative emission pathway assessment, reflecting the likelihood of policy implementation. • Carbon pricing ranges from TWD 834 to TWD 5,215 per ton of CO2e. **IEA NZE (Net Zero Emissions Scenario):** • This scenario assumes the global energy sector achieves net-zero carbon emissions by 2050, with developed economies reaching the target earlier than other countries. • Carbon pricing ranges from TWD 2,682 to TWD 6,109 per ton of CO2e. **Physical Risks:** E Ink utilizes the latest CMIP 6 (Coupled Model Intercomparison Project Phase 6) model data provided by the National Disaster Prevention and Protection Center to assess the flood and landslide risks across various locations in Taiwan's value chain under the SSP1-2.6 and SSP5-8.5 scenarios. These assessments are used to plan future risk mitigation

Project	Implementation Status
	measures.
6. E Ink Holdings' transformation plan to address and manage climate-related risks includes several key components:	E Ink actively implements greenhouse gas reduction measures based on its net-zero carbon emission pathway to achieve RE100 by 2030 and net-zero carbon emissions by 2040. The 2030 targets set by the company include a 70% reduction in carbon emission intensity compared to 2021, increasing the number of suppliers using renewable energy by 5 companies by 2025, and developing 3 to 5 sustainable products.
7. If using internal carbon pricing as a planning tool, explain the pricing basis.	The Internal Carbon Price (ICP) at E Ink is primarily calculated based on the estimated prices from domestic and international carbon trading markets and renewable energy procurement. It is applied as a shadow price, with priority given to promoting it in the Taiwan region. The ICP serves as an evaluation metric for new investments and equipment procurement, helping to enhance future investment evaluations and further reduce potential greenhouse gas emissions. For 2024, the ICP is set at TWD 1,000 per ton of CO2e, with plans for regular increases to encourage improvements in equipment energy efficiency, raise carbon management awareness, and support the progress of low-carbon investments.
8. If climate-related goals are set, explain the activities covered, greenhouse gas emission scopes, planning timeline, progress achieved each year, etc. If carbon offsets or Renewable Energy Certificates (RECs) are used to achieve these goals, explain the sources and quantities of the offset carbon emissions or the number of RECs.	E Ink's short-term, long-term, and net-zero carbon emission targets have been reviewed and validated by the Science Based Targets initiative (SBTi) in 2023. The company's targets include: **Short-term Targets:** • Reduce Scope 1 and Scope 2 greenhouse gas emissions by 80% compared to the 2021 baseline by 2030. • Reduce Scope 3 greenhouse gas emissions by 25% compared to the 2021 baseline by 2030. • Increase the share of renewable energy from 0.21% in 2021 to 100% renewable energy usage by 2030. **Long-term Targets:** • Reduce Scope 1, Scope 2, and Scope 3 greenhouse gas emissions by 90% compared to the 2021 baseline by 2040. **Net-zero Target:** • Achieve net-zero greenhouse gas emissions across the value chain by 2040 (Net Zero 2040). **2024 Progress:** • E Ink has reduced Scope 1 and Scope 2 emissions by 40% compared to the 2021 baseline, and global plants have achieved 58% renewable energy usage (RE58). Renewable energy usage amounts to approximately 60,564,000 kWh, sourced from 49,435 renewable energy certificates, 11,025,000 kWh of renewable energy through power purchase agreements (PPA), and 104,000 kWh of self-generated and self-consumed renewable energy, making gradual progress toward the RE100 target.
9. Greenhouse Gas Inventory and Verification Status, Reduction Targets, Strategies, and Specific Action Plans (also filled in 1-1 and 1-2).	E Ink conducts an annual greenhouse gas inventory for its global plants in accordance with ISO 14064-1:2018 and obtains external verification. E Ink's interim targets, strategies, and specific action plans are detailed in Appendix 1-1-1 and 1-1-2.

1-1 Greenhouse Gas Inventory and Verification Status for the Most Recent Two Years

1-1-1 Greenhouse Gas Inventory Information

Describe the greenhouse gas emissions (in tons of CO_2e), intensity (in tons of CO_2e per million dollars), and data coverage scope for the most recent two years:

Emissions	2021	2022	2023	2024(Under verification)
Scope 1 (tCO_2e)	3,459.4	3,569.0	3,677.2	3,676.0
Scope 2 (tCO_2e)	42,536.4	36,334.5	30,071.6	23,958.5
Scope 1+2 subtotal (tCO_2e)	45,995.8	39,903.5	33,748.8	27,634.5
Scope 2 (tCO_2e)	5,629.1	86,435.6	52,584.2	52,584.2
Total (tCO_2e)	51,624.9	126,339.1	86,333.0	80,218.7
Greenhouse gas emissions intensity (tCO_2e/per million New Taiwan Dollars) [Scope 1+2 calculation]	2.3	1.3	1.2	0.9

Note 1: Direct emissions (Scope 1, i.e., emissions directly from sources owned or controlled by the company), energy indirect emissions (Scope 2, i.e., emissions from the purchase of electricity, heat, or steam that result from the activities of the company), and other indirect emissions (Scope 3, i.e., emissions from activities of the company that are not classified as Scope 1 or Scope 2 and are from sources not owned or controlled by the company).

Note 2: The data coverage scope for direct emissions and energy indirect emissions should follow the schedule specified in Article 10(2) of this standard, and the information for other indirect emissions may be disclosed voluntarily.

Note 3: Greenhouse gas inventory standard: Greenhouse Gas Protocol (GHG Protocol) or ISO 14064-1 published by the International Organization for Standardization (ISO).

Note 4: Greenhouse gas emissions intensity can be calculated per unit of product/service or revenue, but data should be presented at least based on revenue (million New Taiwan Dollars).

1-1-2 Greenhouse Gas Verification Information

Describe the verification status for the most recent two years as of the date of the annual report, including the scope of verification, verifying organization, verification criteria, and verification opinion:

- Verification Scope: All global locations of E Ink
- Verification Organization: DNV GL Business Assurance Co., Ltd.
- Verification Standard: ISO 14064-1:2018
- Verification Opinion: Reasonable assurance level for Scope 1 and Scope 2; Limited assurance level for Scope 3

Note 1: The company should follow the schedule specified in Article 10(2) of this standard. If the company has not obtained a complete greenhouse gas verification opinion as of the date of the annual report, it should state "Complete verification information will be disclosed in the sustainability report." If the company has not prepared a sustainability report, it should state "Complete verification information will be disclosed on the Market Observation Post System," and disclose the complete verification information in the next year's annual report.

Note 2: The verification organization should comply with the relevant regulations of the Taiwan Stock Exchange Corporation and the Taiwan Securities Association regarding the verification organization for sustainability reports.

Note 3: The disclosure content can refer to the best practice examples on the Corporate Governance Center website of the Taiwan Stock Exchange.

1-2 Greenhouse Gas Reduction Goals, Strategies, and Specific Action Plans:

State the baseline year for greenhouse gas reduction, along with the data, reduction targets, strategies, specific action plans, and the progress toward achieving the reduction targets

E Ink adheres to the ISO 14064-1 standard to conduct annual greenhouse gas inventories. Based on these inventories, the company plans and implements energy-saving and carbon reduction strategies. Regular review meetings are held to track the effectiveness of these strategies, allowing for adjustments to be made in response to actual conditions.

In addressing the global challenge of climate change, companies must continuously invest in reducing greenhouse gas emissions from their operations to mitigate environmental impacts. In 2024, the total greenhouse gas emissions from E Ink's global sites and offices amounted to 27,695.3 metric tons of CO2e, a 40% reduction compared to the 2021 base year. Scope 2 emissions from purchased energy accounted for 23,958.4 metric tons of CO2e, representing 87% of the total greenhouse gas emissions. Due to the achievement of the RE100 target at the US site, the emissions primarily generated from the Taiwan site and the Yangzhou site.

Scope 1 and 2 GHG Emissions

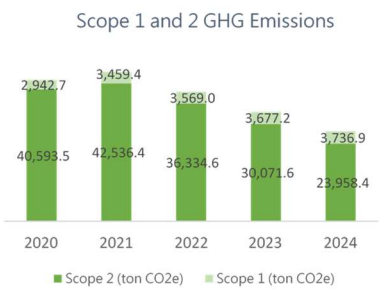

Note 1: Conversion factors are calculated using energy calorific values announced by local governments.
Note 2: The Global Warming Potential (GWP) values are based on the Fifth Assessment Report (AR5) of the IPCC.
Note 3: The consolidation of greenhouse gas emissions is conducted using the operational control approach.
Note 4: The categories of greenhouse gases included in the calculations are CO_2, CH_4, N_2O, HFCs, PFCs, SF6, and NF_3.
Note 5: Scope 2 greenhouse gas emissions from 2021 to 2024 are calculated based on the market-based method.
Note 6: All greenhouse gas emission data have been verified by a third party.

E Ink's GHG reduction targets approved by SBTi

Item	2030 Near-term Target	2040 Long-term Target	2040 Net zero target
Scope 1 and 2	80% reduction compared to the baseline year	90% reduction compared to the baseline year	Achieve net-zero in the value chain
Scope 3	25% reduction compared to the baseline year		
Proportion of renewable energy use	Increase from 0.21% in the baseline year to 100%	-	-

Note 1: The baseline year is 2021.
Note 2: The categories of greenhouse gases included in the calculations are CO_2, CH_4, N_2O, HFCs, PFCs, SF6, and NF_3.
Note 3: The baseline year emissions for Scope 1 and 2 are 45,995.8 metric tons CO_2e; Scope 3 covers categories 1, 2, 3, 5, 7, and 10 in the GHG Protocol, with emissions of 207,283.9 metric tons CO_2e.
Note 4: The targets cover 100% of the baseline year emissions of scope 1 and 2.

E Ink is committed to progressively implementing its carbon reduction goals and responding to both domestic and international climate initiatives. With 2021 as the baseline year, the company has planned a pathway toward net-zero carbon emissions, along with five key reduction strategies. In 2024, the carbon reduction measures promoted by E Ink according to the net-zero carbon emissions pathway include completing carbon inventories and certifications for global operations, utilizing 60,564 thousand kilowatt-hours of renewable energy, and facilitating the acquisition of 15,000 renewable energy certificates annually for suppliers. In addition, E Ink's Taiwan and Yangzhou plants, while continuing their existing energy-saving practices, have also implemented further energy-saving improvements for process equipment, water systems, air conditioning systems, and lighting systems. The newly added carbon reduction measures are expected to save approximately 2,950 thousand kilowatt-hours of electricity annually, equivalent to a reduction of 1,595 metric tons of CO_2e emissions.

Five Major Strategies for Net-Zero Actions

1.Establish international environmental management systems	2. Energy efficiency Enhancement	3. Utilize low-carbon energy	4. Reduce carbon emissions in the value chain	5. Focus negative emissions technologies
Promote greenhouse gas inventories, carbon footprint inventories, and related environmental management systems.	Upgrade and replace outdated equipment, improve equipment efficiency, and implement office energy-saving solutions.	Increase the proportion of renewable energy usage.	Require the supply chain to save energy or adopt renewable energy.	Pay attention to natural carbon sinks, carbon capture and storage, permanent carbon removal, and the acquisition of carbon credits.

2.3 Information Regarding the Company's Audit Fee and Independence

Audit Fee Information

Unit: NT$ thousands

Accounting Firm	Name of CPA	Period Covered by CPA's Audit	Audit Fee	Non - Audit Fee	Total	Remarks
Deloitte & Touche	Hui-Min Huang	2024.01.01~ 2024.12.31	11,095	3,427	14,522	The fees for tax and consulting services, and others.
	Ya-Ling Weng					

2.4 Information on the replacement of CPAs in the last 2 years and beyond: Not applicable.

2.5 Working in the capacity as the chairman, president, financial and accounting manager with the CPA office retained for auditing service or its affiliates in the most recent year: Not applicable.

2.6 Changes in Shareholding of Directors, Supervisors, Managers and Major Shareholders

2.6.1 Changes in Shareholding

Unit: Shares

Title	Name		2024		As of March 30, 2025	
			Holding Increase (Decrease)	Pledged Holding Increase (Decrease)	Holding Increase (Decrease)	Pledged Holding Increase (Decrease)
Chairman	Johnson Lee	Representative of Aidatek Electronics Inc.	-	-	-	-
Director	FY Gan					
Director	Luke Chen	Representative of Shin-Yi Enterprise Co., Ltd.	-	-	-	-
Director	Sylvia Cheng					
Independent director	Po-Young Chu		-	-	-	-
Independent director	Huey-Jen Su		-	-	-	-
Independent director	Chang-Mou Yang		-	-	-	-
Chairman	Johnson Lee		35,000	-	0	-
President	FY Gan		239,000	-	0	-
Executive Vice President	Luke Chen		168,000	-	0	-
Chief Technology Officer	Ian Douglas French		48,600	-	100,400	-
Senior Vice President	YS Chang		(61,000)	-	0	-
Vice President	Tung-Liang Lin		33,800	-	0	-
Chief Financial Officer	Lloyd Chen		40,000	-	0	-
Vice President	Mano Lo		(117,000)	-	217,000	-
Vice President	JM Hung		(2,000)	-	58,800	-
Senior Associate Vice President	Jason Jan		64,000	-	(32,000)	-
Associate Vice President	Max Chen		(33,000)	-	(10,000)	-
Associate Vice President	Peter Peng		(3,000)	-	0	-
Associate Vice President	James Huang		10,000	-	10,000	-
Associate Vice President	Abraham Lin		64,200	-	15,600	-
Associate Vice President	Jim Chang		33,000	-	40,000	-
Associate Vice President	Jason Chiang		161,000	193,000	0	-
Associate Vice President	David Liu		NA(Note1)		60,000	-
Accounting Director	Jimmy Lee		-	-	NA(Note2)	
Accounting Director	Patrick Chang		NA(Note2)			
Major Shareholder	YFY Inc.		-	-	-	-

Note 1: David Liu was promoted to Assistant Manager on July 1, 2024.

Note 2: Patick Chang was appointed as the interim accounting manager starting from February 22, 2025 upon the board's approval, while the original accounting manager, Jimmy Lee, was reassigned to the position of audit manager on the same day.

2.6.2 The transferee of equity shares is a related party: None.

2.6.3 Information on related parties in equity transfer: None.

2.6.4 Information on related parties in equity pledge: None.

2.7 Relations among the Top 10 shareholders by quantity of shareholding.

2025/03/30

Name	Current Shareholding		Spouse, Minor Children Shareholding		Shareholding by Nominee		Name and Relationship Between the Company's Top Ten Shareholders, or Spouses or Relatives Within Two Degrees		Remarks
	Shares	%	Shares	%	Shares	%	Name	Relationship	
YFY Inc.	133,472,904	11.61%	-	-	-	-	1.LUO,BING-JHENG	1.Representative of Juristic-person Director	
Representative：Ye,Huei-Cing	-	-	-	-	-	-	2.Shin-Yi Enterprise Co., Ltd.	2.Juristic-person Director	
S.C. Ho	80,434,300	6.99%	-	-	-	-	1.Shin-Yi Enterprise Co., Ltd. 2.Hsinex International Corporation 3.HO,An-Jen	1.Director and spouse of representative 2.Director and spouse of representative 3.Maternal grandfather	
Cathay Life Insurance Co.,Ltd.	35,199,537	3.06%	-	-	-	-	None	None	
Representative：Ming-Ho Hsiung	-	-	-	-	-	-			
Shin-Yi Enterprise Co., Ltd.	32,842,345	2.86%	-	-	-	-	1.S.C. Ho 2.Hsinex International Corporation 3.HO,An-Jen	1.Director and spouse of representative 2.Chairman 3.Maternal grandmother	
Representative：C. J. Chang	0	-	80,434,300	6.99%	-	-			
Hsinex International Corporation	27,012,127	2.35%	-	-	-	-	1.S.C. Ho 2.Shin-Yi Enterprise Co., Ltd. 3.HO,An-Jen	1.Director and spouse of representative 2.Chairman 3.Maternal grandmother	
Representative：C. J. Chang	-	-	80,434,300	6.99%	-	-			
Investment account of Norges Bank managed by Citibank Taiwan	25,239,497	2.19%	-	-	-	-	None	None	
YFY Development Corp.	23,326,296	2.03%	-	-	-	-	1.YFY Inc.	1.Juristic-person Director	
Representative：LUO,BING-JHENG	-	-	-	-	-	-			
Chung Hwa Pulp Corporation	20,000,000	1.74%	-	-	-	-	1.YFY Inc. 2.Ye,Huei-Cing	1.Juristic-person Director 2.Representative of Juristic-person Director	
Representative：HUANG,KUN-XIONG	-	-	-	-	-	-			
Labor Pension Fund	18,164,000	1.58%	-	-	-	-	None	None	
HO,An-Jen	14,887,000	1.29%	-	-	-	-	1.S.C. Ho 2.C. J. Chang	1.Maternal grandson 2.Maternal grandson	

2.8 Shareholdings of the Company, its Directors, Executives, and Entities Directly or Indirectly Controlled by the Company in the Same Investee Company, and the Consolidated Comprehensive Shareholding Percentage

December 31, 2024/Unit: Shares

Affiliated Enterprises	Ownership by the Company		Direct or Indirect Ownership by Directors, Supervisors, Managers		Total Ownership	
	Shares	%	Shares	%	Shares	%
New Field e_Paper Co., Ltd.	158,703,191	100.00%	0	0	158,703,191	100.00%
E Ink Technology B.V.	437,536,259	100.00%	0	0	437,536,259	100.00%
YuanHan Materials Inc.	183,819,268	100.00%	0	0	183,819,268	100.00%
Dream Universe Ltd.	4,050,000	100.00%	0	0	4,050,000	100.00%
Prime View Communications Ltd.	3,570,000	100.00%	0	0	3,570,000	100.00%
Enttek Co., Ltd.(Note 2)	2,203,161	47.07%	0	0	2,203,161	47.07%
Linfiny Corporation	339,828	23.00%	1,137,686	77.00%	1,477,514	100.00%
Plastic Logic HK Limited	223,655	2.40%	2,500,000	26.79%	2,723,655	29.19%
E Ink Japan Inc.	200	100.00%	0	0	200	100.00%
Integrated Solutions Technology, Inc.	9,896,402	26.01%	3,395,000	8.92%	13,291,402	34.93%

Note 1：Investment with equity method.

Note 2：Under liquidation.

III. Capital Overview

3.1 Capital and Shares

3.1.1 Source of Capital

March 30, 2025 / Unit: Thousand Shares; Thousand New Taiwan Dollars

YYMM	Offering price	Authorized capital		Paid-in capital		Remark		
		Quantity of shares	Amount	Quantity of shares	Amount	Source of capital stock	Investment in kind by assets other than cash	Others
4-Jul	10	1,000,000	10,000,000	425,960	4,259,597	Capitalization of retained earnings into new shares amounting to NT$259,597 thousand	None.	July 21, 2004: Jin-Guan-Zheng(I)-Zi No. 0930132629
5-Jun	10	1,000,000	10,000,000	548,435	5,484,353	Capitalization of retained earnings into new shares amounting to NT$1,224,756 thousand	None.	June 29, 2005: Jin-Guan-Zheng(I)-Zi No. 0940125990
6-May	10	1,000,000	10,000,000	548,139	5,481,393	Decapitalization amounting to NT$2,960 thousand	None.	February 20, 2006: Jin-Guan-Zheng (III)-Zi. No. 0950105976
7-Sep	10	1,000,000	10,000,000	582,760	5,827,596	Capitalization of retained earnings amounting to NT$233,113 thousand. Employee stock option and convertible bonds conversion amounting to NT$113,090 thousand.	None.	September 17, 2007: (2007)Yuan-Shang-Zi No. 0960025503
8-Jan	10	1,000,000	10,000,000	587,833	5,878,331	Employee stock option and convertible bonds conversion amounting to NT$50,735 thousand	None.	January 17, 2008: (2008)Yuan-Shang-Zi No. 0970000871
8-Apr	10	1,000,000	10,000,000	590,128	5,901,280	Employee stock option conversion amounting to NT$22,949 thousand	None.	April 10, 2008: (2008)Yuan-Shang-Zi No. 0970009235
8-Jun	10	1,000,000	10,000,000	590,534	5,905,341	Employee stock option conversion amounting to NT$4,061 thousand	None.	June 27, 2008: (2008) Yuan-Shang-Zi No. 0970017534
8-Sep	10	1,000,000	10,000,000	678,278	6,782,781	Capitalization of retained earnings amounting to NT$873,130 thousand. Employee stock option conversion amounting to NT$4,310 thousand.	None.	September 3, 2008: (2008)Yuan-Shang-Zi No. 0970024760
9-Jan	**10**	**1,000,000**	**10,000,000**	**748,313**	**7,483,128**	**Offering new shares through private placement amounting to NT$700,000 thousand. Employee stock option conversion amounting to NT$347 thousand.**	**None.**	**January 20, 2009: (2009) Yuan-Shang-Zi No. 0980001762**
9-Apr	10	1,000,000	10,000,000	750,227	7,502,270	Employee stock option conversion amounting to NT$19,143 thousand.	None.	April 13, 2009: (2009) Yuan-Shang-Zi No. 0980009913
9-Aug	10	1,000,000	10,000,000	830,227	8,302,227	Raising capital by issuing new shares amounting to NT$800,000 thousand.	None.	August 25, 2009: (2009) Yuan-Shang-Zi No. 0980023051
9-Sep	10	1,000,000	10,000,000	832,602	8,326,016	Employee stock option conversion amounting to NT$23,746 thousand	None.	September 7, 2009: (2009) Yuan-Shang-Zi No. 0980024687
10-Jan	10	2,000,000	20,000,000	956,321	9,563,210	Employee stock option conversion amounting to NT$26,957 thousand. Convertible bonds conversion amounting to NT$510,237 thousand.	None.	January 7, 2010: (2010) Yuan-Shang-Zi No. 0990000661
10-Feb	10	2,000,000	20,000,000	1,060,468	10,604,680	Offering of preferred shares amounting to NT$1,041,471 thousand.	None.	February 3, 2010: (2010) Yuan-Shang-Zi No. 0990003179
10-Mar	10	2,000,000	20,000,000	1,060,468	10,604,680	Conversion of preferred shares to common shares	None.	March 12, 2010: (2010) Yuan-Shang-Zi No. 0990006406

YYMM	Offering price	Authorized capital		Paid-in capital		Remark		
		Quantity of shares	Amount	Quantity of shares	Amount	Source of capital stock	Investment in kind by assets other than cash	Others
						amounting to NT$1,041,471 thousand.		
10-Apr	10	2,000,000	20,000,000	1,073,586	10,735,856	Employee stock option conversion amounting to NT$27,603 thousand. Convertible bonds conversion amounting to NT$103,571 thousand.	None.	April 12, 2010: (2010) Yuan-Shang-Zi No. 0990009479
10-Jul	10	2,000,000	20,000,000	1,074,467	10,744,667	Employee stock option conversion amounting to NT$2,590 thousand. Convertible bonds conversion amounting to NT$6,221 thousand.	None.	July 21, 2010: Yuan-Shang-Zi No. 0990020870
10-Oct	10	2,000,000	20,000,000	1,075,118	10,751,180	Employee stock option conversion amounting to NT$6,514 thousand	None.	November 17, 2010: Yuan-Shang-Zi No. 0990034114
10-Dec	10	2,000,000	20,000,000	1,077,273	10,772,732	Employee stock option conversion amounting to NT$21,552 thousand	None.	January 5, 2011: Yuan-Shang-Zi No. 1000000584
11-Mar	10	2,000,000	20,000,000	1,078,495	10,784,953	Employee stock option conversion amounting to NT$12,220 thousand	None.	April 20, 2011: Yuan-Shang-Zi No. 1000010702
11-Aug	10	2,000,000	20,000,000	1,079,705	10,797,054	Employee stock option conversion amounting to NT$12,101 thousand	None.	September 15, 2011: Yuan-Shang-Zi No. 1000027409
11-Dec	10	2,000,000	20,000,000	1,080,142	10,801,418	Employee stock option conversion amounting to NT$4,364 thousand	None.	January 17, 2012: Yuan-Shang-Zi No. 1010002102
12-Mar	10	2,000,000	20,000,000	1,080,250	10,802,504	Employee stock option conversion amounting to NT$1,086 thousand	None.	April 9, 2012: Yuan-Shang-Zi No. 1010010516
12-Jun	10	2,000,000	20,000,000	1,080,398	10,803,981	Employee stock option conversion amounting to NT$1,477 thousand	None.	July 9, 2012: Yuan-Shang-Zi No. 1010020074
12-Aug	10	2,000,000	20,000,000	1,080,465	10,804,646	Employee stock option conversion amounting to NT$665 thousand	None.	September 11, 2012: Yuan-Shang-Zi No. 1010028380
12-Oct	10	2,000,000	20,000,000	1,080,896	10,808,962	Employee stock option conversion amounting to NT$4,316 thousand	None.	November 12, 2012: Yuan-Shang-Zi No. 1010034764
13-Mar	10	2,000,000	20,000,000	1,080,990	10,809,897	Employee stock option conversion amounting to NT$935 thousand	None.	April 8, 2013: Yuan-Shang-Zi No. 1020009668
13-Jul	**10**	**2,000,000**	**20,000,000**	**1,140,990**	**11,409,897**	**Offering new shares through private placement amounting to NT$600,000 thousand**	**None.**	**July 24, 2013: Yuan-Shang-Zi No. 1020022148**
14-Jun	10	2,000,000	20,000,000	1,140,468	11,404,677	Cancellation of treasury shares amounting to NT$5,220 thousand.	None.	Letter No. 1030016291 issued by the Department of Commerce and Industry on June 4, 2014.
21-Aug	10	2,000,000	20,000,000	1,140,405	11,404,047	Cancellation of treasury shares amounting to NT$630 thousand.	None.	Letter No. 1100023756 issued by the Department of Commerce and Industry on August 20, 2021.
23-Dec	10	2,000,000	20,000,000	1,141,103	11,411,033	Employee stock option warrants converted to NT$6,986 thousand.	None.	Letter No. 1120039861 issued by the Department of Commerce and Industry on December 5, 2023.
24-Mar	10	2,000,000	20,000,000	1,142,394	11,423,937	Employee stock option warrants converted to NT$12,904 thousand.	None.	Letter No. 1130008909 issued by the Department of

YYMM	Offering price	Authorized capital		Paid-in capital		Remark		
		Quantity of shares	Amount	Quantity of shares	Amount	Source of capital stock	Investment in kind by assets other than cash	Others
								Commerce and Industry on Mar 26, 2024.
24-Jun	10	2,000,000	20,000,000	1,144,432	11,444,324	Employee stock option warrants converted to NT$4,657 thousand.	None.	Letter No. 1130017848 issued by the Department of Commerce and Industry on June 6, 2024.
24-Sep	10	2,000,000	20,000,000	1,144,898	11,448,981	Employee stock option warrants converted to NT$4,657 thousand.	None.	Letter No. 1130028488 issued by the Department of Commerce and Industry on September 6, 2024.
24-Dec	10	2,000,000	20,000,000	1,145,916	11,459,163	Employee stock option warrants converted to NT$10,182 thousand.	None.	Letter No. 1130038523 issued by the Department of Commerce and Industry on December 5, 2024.
25-Mar	10	2,000,000	20,000,000	1,148,219	11,482,193	Employee stock option warrants converted to NT$23,030 thousand.	None.	Letter No. 1130008875 issued by the Department of Commerce and Industry on March 25, 2025.

Share / Class	Authorized capital			Remark
	Outstanding shares	Unissued shares	Total	
Registered common shares	1,148,219,337	851,780,663	2,000,000,000	Stocks listed at TWSE or TPEx

3.1.2 List of Major Shareholders

2025/03/30

Shareholder's Name	Shares	Percentage
YFY Inc.	133,472,904	11.61%
S.C. Ho	80,434,300	6.99%
Cathay Life Insurance Co.,Ltd.	35,199,537	3.06%
Shin-Yi Enterprise Co., Ltd.	32,842,345	2.86%
Hsinex International Corporation	27,012,127	2.35%
Investment account of Norges Bank managed by Citibank Taiwan	25,239,497	2.19%
YFY Development Corp.	23,326,296	2.03%
Chung Hwa Pulp Corporation	20,000,000	1.74%
Labor Pension Fund	18,164,000	1.58%
HO,An-Jen	14,887,000	1.29%

3.1.3 Dividend Policy and Implementation Status

1. The dividend policy of the Company is specified below:

   The Company is engaged in frontier technologies and adopted the residual dividend policy in supporting the long-term financial planning of the Company for sustainable development.

   If the Company has a balance after annual account settlement, appropriate for tax payment and covering carryforward loss, followed by the appropriation of 10% as legal reserve under law, and appropriation or reversal of special reserve. If there is still a balance, the Board will retain specific amount of earnings with reference to the capital budget planning of the future to meet the capital needs in the years ahead, and appropriate 50% of the remainder as dividend payable to the shareholders.

   The aforementioned distribution of income could be pooled up with the undistributed earnings accumulated in the previous year.

   Dividends to the shareholders may be paid in cash or in stock where cash dividend shall not fall below 10% of the total dividend payable to the shareholders of the year.

   The appropriation of legal reserve as mentioned in paragraph 2 could be waived if the amount is equivalent to the paid-in capital.

   With the attendance of more than 2/3 of directors in the Board Meeting and the resolution of more than half of the present directors, all or part of the dividends to be distributed shall be paid by issuance of new shares. The issuance shall be approved by the shareholders' meeting.

2. The proposal of dividend payment in this session of the Shareholders Meeting:

   The cash dividend for 2024 was approved by the Board of Directors on February 21, 2025. The details of the approved dividend distribution are as follows:

   (The remaining profit distribution items will be executed after being approved by the shareholders' meeting on May 28, 2025.)

E Ink Holdings Inc.

Profit Distribution Table for the Year 2024

Unit:NTD

Item	Amount		Remarks
Beginning retained earnings		10,665,361,843	
Net profit after tax for the year	8,867,482,368		
Adjustment of retained earnings due to equity method investments	309,239,866		
Recognition of remeasured amounts for defined benefit plans in retained earnings	3,806,198		
Amount of net profit after tax for the year, including items not included in net profit after tax for the year, added to undistributed earnings for the year		9,180,528,432	
Provision for statutory surplus reserve (10%)		(918,052,843)	
Distributable earnings for the year		18,927,837,432	
Distribution items			
Cash dividends and bonuses to shareholders		(5,741,096,685)	NT$5 per share
Ending retained earnings		13,186,740,747	

3.1.4 The influence of the payment of stock dividend proposed in this session of the Shareholders Meeting on the operation performance and earnings per share of the Company: Not applicable.

3.1.5 Remuneration for Employees, Directors, and Supervisors

1. The percentage and scope of remuneration to employees, Directors, and Supervisors as stated in the Articles of Incorporation:

   If the Company gains profits in the year, it shall set aside at least 1% of the profits as the remuneration for employees and set aside not more than 1% of the profits as the remuneration for directors. However, if the Company has accumulated loss, certain amount to offset such loss shall be set aside in advance.

   Remuneration to the Directors shall be made in cash. Remuneration to employees may be made in cash or stock. The employees of subsidiaries meeting specific condition are entitled to the remuneration. Such condition shall be determined by the Board under authorization. The ratio of remuneration to the Directors, the ratio of remunerations to employees and method of payment shall be determined by the Board in a session with the presence of at least two-thirds of the Directors and a simple majority of the Directors in session, and report to the Shareholders Meeting.

   Remunerations to employees and the Directors shall be calculated on the basis of the earnings of the current year (the balance of earnings before taxation before the deduction of remunerations to employees and Directors) net of accumulated deficit.

2. The estimation of the amount for the remunerations to employees, Directors, and Supervisors in current period is based on the quantity of shares paid as remunerations to employees in the calculation and the actual amount paid, and the accounting if there is a difference between the estimated amount and the actual amount:
   (1) For the 2024, employee compensation is estimated at NT$103,000 thousand and director remuneration at NT$40,000 thousand. These amounts were resolved by the board of directors on February 21, 2025, to be distributed in cash, and are pending reporting at the shareholders' meeting on May 28, 2025.
   (2) If there is significant change in the amount stated in the consolidated financial statements before announcement, the accounting of the adjustment of the change is recognized as expense in the period. If there is still a significant change in the amount after the announcement of the consolidated financial statements, handle the account under the change in accounting estimation and entered for adjustment in the next fiscal year.

3. Board approval of remuneration distribution:
   (1) The amount of remuneration to employees, Directors, and Supervisors in cash or stock. If the recognized amount of expense is different from the estimated amount, disclose the difference, the reasons and the response:
      A. For the 2024, employee compensation is estimated at NT$103,000 thousand and director remuneration at NT$40,000 thousand. These amounts were resolved by the board of directors on February 21, 2025, to be distributed in cash.
      B. There is no difference between the amount of remuneration passed by the Board and the amount of recognition in the year.
   (2) The ratio of amount of remuneration to employees paid in cash to the sum of the net income and remuneration to employees in current period: not applicable.

4. Actual distribution of remuneration to employees, directors, and supervisors for the previous fiscal year:

Item	Amount(thousand)
Employees' compensation	88,990
Remuneration of directors	35,900

Note: The actual distribution amount is the same as the recognized amount.

3.1.6 Buyback of Treasury Stock: None.

3.2 Corporate Bonds: None.

3.3 Preferred Stock: None.

3.4 Global Depository Receipts

Item \ Issue date			2009/12/11
Issue date			2009/12/11
Issuance and listing			Luxembourg Stock Exchange
Unit issuing price			USD165,012,400
Units issued			USD23.5732
Quantity of Issuance			7,000,000 units
Source of negotiable securities			The Company's common shares held by capital increased in Cash
Quantity of negotiable securities			70,000,000 shares
Rights and obligations of GDR holders			Same as those of common share holders
Trustee			-
Depository bank			CITIBANK,NA
Custodian bank			Citi Bank, Taiwan
Outstanding balance(2025/02/28)			1,312 units
Treatment of expenses incurred at issuance and thereafter			Issue cost: amortized by the issuing companies and shareholder participants according to the actual shares issued Expenses incurred after issuance: amortized by the issuing company.
Important conventions about depository and escrow agreement			Detailed contract
Market price per unit (USD)	2024	Highest	99.5
		Lowest	57.5
		Average	78.5
	Current year to 2025/03/30	Highest	90
		Lowest	79.5
		Average	84.75

3.5 Employee Stock Option Certificate Processing Status

3.5.1 Disclosure of the status of unexpired employee stock options as of the date of the annual report printing and their impact on shareholder equity:

Type	2021 (I)	2021 (II)
Effective Date of Declaration and Total Units	2021/04/08[3,890 units]	2021/04/08[6,110 units] 2021/06/01[10,000 units]
Date of Issuance (Processing)	2021/8/11	2021/10/4
Issued Units	3,890 units	6,110 units 10,000 units
Remaining Units Available for Issuance	-	-
Ratio of Subscribed Shares to Total Issued Shares	0.33879%	0.53213% 0.87091%
Subscription Duration	2023/08/11-2027/08/10	2023/10/04-2027/10/03
Exercise Method	Issuance of New Shares	Issuance of New Shares
Restricted Subscription Period and Percentage (%)	40% exercisable after 2 years 70% exercisable after 3 years 100% exercisable after 4 years	40% exercisable after 2 years 70% exercisable after 3 years 100% exercisable after 4 years
Number of Shares Acquired Through Execution	2,071,700	7,417,742
Amount of Subscribed Shares Executed	152,414,338	487,156,555
Number of Unexecuted Subscription Shares	1,818,300	2,956,558 5,735,700
Subscription Price per Share for Unexecuted Subscribers	74.14 ; 72.90	66.26 ; 65.15
Percentage of Unexecuted Subscription Shares to Total Issued Shares (%)	0.15836%	0.25749% 0.49953%
Impact on Shareholder Equity	The issuance of employee stock option certificates aims to attract and retain talent, motivate employees, and boost morale. While this may dilute existing shareholders' equity, it's expected to benefit them in the long run by retaining and motivating employees to create value for the company and its shareholders.	

3.5.2 The names of the managers and the top 10 employees who have acquired ESOP over the years to the date this report was printed, their status of acquisition and subscription of shares from the ESOP:

The Company offered ESOP on August 11, 2021, and October 4, 2021, and the stock options can be exercised between 2023 ~ 2027.

2025/03/30

	Title	Name	Number of shares acquired	The ratio of subscribed shares acquired to the total number of issued shares	Executed				Unexecuted			
					Number of subscribed shares	Subscription price	Subscription amount	The ratio of shares acquired to the total number of issued shares	Number of subscribed shares	Subscription price	Subscription amount	The ratio of shares acquired to the total number of issued shares
Executive level	Chairman	Johnson Lee	3,973,000	0.346%	1,931,800	65.15-74.14	129,761,616	0.168%	2,041,200	65.15-74.14	135,973,355	0.178%
	President	FY Gan										
	CTO, Taiwan	Ian French										
	Executive Vice President	Luke Chen										
	Senior Vice President	YS Chang										
	Chief Financial Officer (CFO)	Lloyd Chen										
	Vice President	JM Hung										
	Vice President	Mano Lo										
	Vice President / Fellow	Tung-Liang Lin										
	Senior Assistant Vice President	Jason Jan										
	Assistant Vice President	Jim Chang										
	Assistant Vice President	Max Chen										
	Assistant Vice President	Peter Peng										
	Assistant Vice President	James Huang										
	Assistant Vice President	Jason Chiang										
	Assistant Vice President	Abraham Lin										
	Assistant Vice President	David Liu(Note)										
	Senior Director	Patrick Chang(Note)										
	Deputy Director	Jimmy Lee(Note)										
	Corporate Governance Officer	June Su(Note)										
Employee	CTO	Huitema, Hjalmar E.	2,260,000	0.197%	166,800	65.15-74.14	11,412,116	0.015%	2,093,200	65.15-74.14	139,303,030	0.182%
	Vice President	Zang, HongMei										
	Assistant Vice President	O'Malley, Timothy J.										
	Assistant Vice President	Du, Hui										
	Assistant Vice President	Kumar, Samir										
	Sr. Fellow	Telfer, Stephen										
	CBOO	Apen, Paul G.										
	Sr. Project Director	Valianatos, Peter J.										
	Director	Simon Hsin										
	Senior Director	Roger Chou										

Note: David Liu was promoted to Assistant Vice President on July 1, 2024.Senior Director Patrick Chang has been serving as Acting Accounting Officer since February 22, 2025.
Deputy Director Jimmy Lee stepped down from the position of Accounting Officer and assumed the role of Audit Officer on February 22, 2025.June Su resigned in May 2024.

3.6 The Offering of Restricted Stock: None.

3.7 Merger and acquisition, and acceptance of assigned shares from other Company for issuing new shares: None.

3.8 The implementation of the fund utilization plan: Not applicable.

IV. Operational Highlights

4.1 Business Activities

4.1.1 Business Scope

1. Primary Business Activities

   E Ink Holdings Inc., the world leader in ePaper technology, engages in the research, development, manufacturing and sale of materials and display devices related to electronic paper (ePaper) technology, e.g., Front Plane Laminate (FPL) Film and E-Paper Display (EPD).

2. Revenue Mix

Product \ Year	2024	
	Revenue (NT$1000)	Percentage(%)
IoT applications	12,869,502	40
Consumer electronics	19,293,631	60
Total	32,163,133	100

3. Main products and applications

   Consumer electronics and IoT application products account for the bulk of E Ink's business. Applications include eReaders, electronic shelf labels (ESL), eNotes, ePaper mobile devices, and ePaper digital signage.

4. New Products and Services planned for development

   There are five major trends in E Ink's product:

   A. Continuously advancing color e-paper technology, we strengthen solutions like E Ink Gallery™ and Kaleido™ 3 based on market characteristics and application demands, enhancing color performance and product application value.
   B. Accelerating the adoption of large-scale e-paper applications, expanding technologies such as E Ink Spectra™ 6 and Kaleido™ 3 Outdoor for outdoor advertising, smart retail, and medical signage, aiming to increase market penetration.
   C. Deepening our presence in smart education applications, leveraging e-paper's eye-friendly and paper-like properties to promote products like color study books and digital notebooks, expanding our footprint in the education market solution layout.
   D. To develop and introduce new materials and processes that enhance the performance and specifications of ePaper products to better meet market demands and increase product competitiveness.
   E. Strengthen strategic cooperation and cross-industry alliances with domestic/overseas companies, jointly invest technology and resources to develop the application of low-power and low-carbon ePaper display technology and lay down the foundation for sustainable management.

4.1.2 Industry Overview

1. Current industry trends and outlook

   The development of ePaper can be traced back to the early 1970s. The "electronic ink" familiar to us today was developed at the Massachusetts Institute of Technology in 1996. ePaper technology went through a long phase of research, development, prototyping, and pilot production before finally entering mass production in 2008. E Ink not only ensured its continuous technological leadership, expanded its patent portfolio and deeply cultivated the ePaper industry, but also brought together global talents, technologies, and resources from Taiwan, China, US, and Japan to establish a comprehensive layout of ePaper technology.

   Attributes of ePaper include paper-thinness, ultra-low power consumption, wide viewing angle, bi-stable, viewable under sunlight, and flexible. The potential of ePaper in applications other than eReaders has been widely recognized by the market as well. Demand for ESL continues to grow and acceptance has expanded to major retailers in Europe and US. The requirement for low-power consumption makes ESL a natural fit for IoT applications as well, so there is strong growth potential.

   eNote products for reading and writing now range from 7.8 inches to 13.3 inches (approximately A6 to A4 sizes), catering to both business and education markets. In recent years, alongside existing customers, major international vendors have actively introduced eNote devices with enhanced features

and functionality. The market trend is shifting towards thinner designs, and increasing acceptance of these products has driven significant growth in shipments.

Applications such as ePaper digital signage and information walls are available in both full-color and monochrome display modes. These innovations transform traditional printed advertising into more dynamic and versatile formats while expanding the market for sustainable display technologies. Additionally, E Ink Prism™, a multi-color ePaper, offers a range of architectural applications, including digital dynamic sculptures, further enhancing creative and interactive design possibilities.

As the product applications and ecosystem of ePaper technology continues to develop, E Ink play a key role in the overall supply chain and remains the industry leader in terms of technology and production capacity via continuous innovation and investment of resources.

2. The ePaper Display Supply Chain

Upstream	Color Particle, PET Film, TFT Substrate, Driving IC, PCB, Front Light Module, Touch Panel, Timing Controller, Touch IC, AP System, Microcontroller Unit
Midstream	FPL Film, EPD
Downstream	Module Manufacturers, System Manufacturers, Brand Customers

3. Product Development Trends

A. eReader

In 2024, Tier 1 eReader customers began launching their first color eReaders, signaling the full-scale launch of the color eReader era. This also injected new growth momentum into the entire eReader market, particularly in mainstream and entry-level models. Colorization not only attracts new eReader users, expanding the market base, but also motivates existing black-and-white eReader users to upgrade their devices. In 2025, brand manufacturers are expected to continue expanding their color product lines, primarily utilizing the third-generation Print Color ePaper technology E Ink Kaleido™ 3. Paired with high voltage driving and E Ink ComfortGaze™ front light technology, which emphasizes eye protection and low blue light, the responsiveness, optics, and color performance of Kaleido™ 3 are further enhanced. Additionally, Kaleido™ will technically challenge video playing and, by utilizing advanced algorithms and special Waveforms, enable eReaders to potentially incorporate interactive user interfaces, bringing a better user experience, further amplifying the impact of color eReaders, and driving market growth.

B. Electronic Shelf Label (ESL)

As smart retail applications and technologies mature, stock management and price labeling in physical stores can entirely rely on ESL technology to realize real-time price changes and updates, achieve inventory management benefits through backend management system connections, enhance price management, and improve the shopping experience. Given the changes in consumer behavior caused by COVID-19 and the rapid change of supply and demand of materials caused by inflation, product prices fluctuate rapidly. As labor costs gradually increase and online and offline shopping becomes more and more frequent, retailers must rely on ESL to change prices, optimize inventory management, and update promotions to all stores over cloud transmission in real-time. Unlike traditional printed paper labels, ESL can deliver real-time updates through wireless transmission from any location. Therefore, it offers better speed and efficiency and eliminates human error on price changes. Accurate price updates not only reduce the chance of mispricing, but also improve the speed of price response, update promotional prices and information in real-time, increase customer satisfaction and the store's image, and substantially reduce expiring inventory and waste in a very competitive market. ESL can also reduce the labor cost of replacing labels and other operating and management costs. ESL is the cornerstone of digital and smart retail. In addition to displaying prices and promotions in stores, it can also be extended to smart warehouse inventory management, factory/warehouse logistics, and hospital use. As ESL can be read remotely through wireless means, a large amount of data can be accessed to facilitate inventory management. Automatic notifications can also be sent through the backend management system when products approach their expiration dates. When ESL is used in unmanned stores, the tags placed on the product

shelves can be dynamically updated and the latest product information can be displayed, which is in line with the new trend of smart retail.

ePaper offers the advantages of light and thin and low power consumption. Not only does it have a paper-like effect but also offers incredibly useful features such as enabling users to update product pricing from any location dynamically. Through wireless data transmission, ESL can perform real-time information updates and improve accuracy and efficiency. In wholesale stores or large warehouses, ESL using ePaper technology is aligned with the automation and smart management trend.

The bi-stability characteristic allows ePaper products to consume power only when data is written and updated, meaning there is no power consumption as long as the displayed data does not need to be updated. This advantage is in line with the general trend of energy saving. It also helps retailers reduce the cost of replacing traditional printed labels. In addition, unlike LCD monitors, EPDs have viewing angles nearly 180 degrees, even if viewed from tilted sideways.

Colorization has become an inevitable trend. In addition, to cater to different applications of ESLs, E Ink has not only launched black, white, red, and black, white, yellow three-color ePaper used for special offers or promotions but also launched the E Ink Gallery Palette™ 4000, which offers seven colors in 2020. In 2021, E Ink launched the latest generation of black, white, red, and yellow four-color ePaper Spectra™ 3100. In 2022, the black, white, red, yellow, and orange five-color ePaper Plus and in 2023, a color ePaper technology Spectra™ 6 were released. In Jan 2025, it launched low-temperature four-color ePaper technology platform suitable for freezer cabinets. The E Ink Spectra™ 6 is a full-color product that provides unprecedented color saturation and vibrancy on reflective displays, rivaling the color performance of today's most advanced paper-based color printers. These products are suitable for in-store advertising, indoor signage, or as replacements for any paper-based posters and are expected to offer retailers more diversified display content, enhance operational capabilities, and create better sales performance. In addition to battery-powered ePaper products, E Ink also offers low-voltage-driven ESL solutions. Compared to wireless transmission in large stores, this battery-free solution is more suitable for small shops, as it eliminates the need for interior renovations or hardware installations. It only requires a smartphone with NFC functionality to change the tag content at any time. In response to the demand and expectations for color ePaper in the end-user market, E Ink continues to develop more color ePaper products, providing the market with a greater variety of choices and solutions.

C. eNote

eNotes retain the inherent benefits of ePaper—reading comfortably and low power consumption—while also offering writable capabilities. Recent trends show a move toward larger sizes, coupled with data editing, storage management, AI-assisted reading, and smart recognition features. These advancements allow users to not only enjoy the advantages of ePaper technology but also enhance overall work efficiency. By integrating digital handwriting technology from its partners, E Ink's eNotes provide a solution for healthy reading, convenient writing, and intelligent learning in the education sector.

Targeting North America, Europe, Japan, and China, these products have expanded from initial applications in professional and commercial fields to recent adoption in the education market. This gradual shift is realizing the vision of eNotes replacing traditional paper-based written exams. Furthermore, these products have garnered strong support from consumers who embrace new technologies and from writers.

For the professional and commercial application markets, smart office eNotes that combine voice recognition, speech-to-text editing, and handwriting recognition serve as daily work recording tools. These features enable eNotes to transcribe audio into text, significantly improving the work efficiency of business professionals.

In the smart education market, the increasing global enrollment in basic education and on-the-job training education, coupled with China's "Double Reduction" policy, has accelerated the adoption of self-learning devices and ePaper educational practice books for after-school homework and assessments. This allows parents to choose eye-friendly ePaper products , enabling future generations to engage in more precise and intelligent learning. In China, many leading smart education clients are using E Ink's new generation E Ink Kaleido™ 3 color ePaper to develop workbooks, effectively addressing the need for eye-friendly reading for students and color annotations for teachers.

Moreover, this new generation of E Ink Kaleido™ 3 enriches and sharpens the text and graphics

of notes. To enhance the image reading experience, this new color ePaper offers 16 grayscale levels and 4,096 colors, with a 30% increase in color saturation, enabling the simultaneous display of colorful notes and images. In addition, E Ink's full-color ePaper (Gallery™ 3), launched in 2024, has been used by European customers in eNotes brought to market, with many other customers currently developing applications. This marks a new era for eNotes, and the future launch of products using full-color eNotes is anticipated.

E Ink remains committed to advancing eNote technology by enhancing product performance, expanding feature sets, and diversifying product offerings. In collaboration with customers and partners, E Ink continues to refine software features to enhance the user experience. The integration of AI capabilities, such as handwriting and voice recognition, is not only utilized in the smart education market but is also gradually being introduced into smart office environments and academic conferences. E Ink is also promoting the application of smart paperless total solutions in professional fields such as law, finance, and healthcare. With the maturation of color ePaper commercialization, the eNote market is set to enter another groundbreaking phase of growth.

D. Smart Display Card

The shift in consumption towards online and mobile shopping in recent years has led to an increase in credit card fraud that damages the finances and reputation of credit card issuing agencies. Most credit card fraud comes from card-less transactions such as online shopping and non-contact payment. Since 2006, the world's major financial security product and service providers have been developing functions like dynamic display or biometrics to enhance credit card security. Furthermore, all-in-one smart cards can consolidate a consumer’s credit cards, membership cards, and reward cards into a single card. Some even integrate a discount code display to maximize utility and provide greater value to consumers.

To combat the ever-growing credit card fraud, financial institutions and credit card companies are exploring hardware and software solutions to offer customers more secure credit card products. One of the key features being implemented is the use of ePaper on the back of credit cards for dynamic display verification codes. With the introduction of DCVV cards, it is expected that the function of synchronizing updates with banks every 30 to 60 minutes will prevent the theft and misuse of the three-digit code (motion code) on the back of credit cards. This measure will effectively reduce losses. By providing credit cards with embedded EPD that update the dynamic security code every 60 minutes, credit card companies can effectively prevent unauthorized individuals from copying credit card numbers for fraudulent transactions online and through mobile devices. Furthermore, ePaper offers light and thin, low power consumption, sturdy and flexible, and high contrast, making it the most suitable technology for smart card applications. In recent years, with the popularity of virtual currency like Bitcoin, the combination of cold storage technology and EPD has emerged as a trend in the form of Bitcoin wallet cards. Leading cryptocurrency manufacturer, Ledger, has also introduced cold wallets with EPD. In addition to the successful launch of the first-generation high-end cold wallet, Ledger also released an affordable version of the ePaper cold wallet last year. Ledger will integrate ePaper as the primary display screen across its entire series of cold wallets. Recently, color ePaper display technology with a cost-effective GOA solution has also been considered as a potential direction.

E. Luggage/Logistic Tag

EPDs are bi-stable, reflective, low power consumption, viewable under direct sunlight, flexible and pressure-resistant, with a viewing angle of nearly 180 degrees. Aviation and logistics industries in developed countries like Europe, the US, Japan have been investing in integrated logistics and luggage tag solutions that use ePaper as the primary display in recent years.

The aviation industry, for example, transports more than 3.5 billion people a year. Each year, lost luggage costs the airlines up to several billion dollars in compensation. How to effectively track luggage while keeping manpower, energy and paper costs down has become the most pressing issue facing the aviation industry today.

The current system solution integrates EPD and wireless transmission technologies such as Bluetooth or Near Field Communication (NFC) to transmit and receive the ID code assigned to the luggage's flight. Passengers and flight details are also displayed on the tag. The system offers airlines an effective way of tracking luggage and troubleshooting problems during luggage transport.

Following Alaska Airlines' proactive adoption of electronic bag tags, many low-cost carriers have

also started relevant assessments. Some traditional airlines are equipping their flight crew with electronic bag tags as standard equipment, attempting to increase their effective contribution to ESG. Many logistics industry-related companies are also researching how to replace existing traditional logistics labels with ePaper applications. They aim to combine this with wireless transmission systems to achieve a total solution for centralized control and monitoring of cargo status. AIOI, a Japanese logistics label solution provider, has introduced ePaper logistics tags into the Japanese medical supply chain. Utilizing ePaper's reusable, low-power consumption, and battery-free characteristics, they have adopted battery-free ePaper labels as tags for medicine delivery boxes, replacing traditional paper labels. Paper labels require printing and attachment each time, and after use, the old labels must be torn off and the delivery boxes cleaned, which is labor-intensive and environmentally unfriendly. The ePaper logistics labels completely address these pain points. In addition to reducing labor, they make a significant contribution to ESG. Integrated ePaper luggage/logistics tags can also save paper and energy consumption, reduce the resources needed for manual tag replacement, and enable remote monitoring of luggage/goods, significantly reducing overall travel/logistics time and financial costs. This has become an inevitable trend in the global aviation and logistics industries.

Outside of logistic applications, eBadges have been accepted by the market as well. Basic access control can be complemented with personnel location and movement analysis. If combined with AIoT+5G and big data, it can even be used to provide intelligent factory solutions.

In the era of ESG, the E-paper Industry Alliance collaborates with upstream and downstream partners to hold the "Smart Circular Packaging Empowerment Industry Green Digital Transformation Dual Carbon Forum" in September 2023. They jointly promoted the use of packaging boxes with ePaper waybill modules to achieve carbon reduction through the internal circulation of ePaper. The trial operation is scheduled to commence in 2024.

F. Mobile Device

For dual-screen applications, EPD was introduced to the innovative product sector of PC Convertibles by offering a new 3-in-1 user experience that combined dynamic keyboard, handwriting and reading in 2018. This year, embedding ePaper screens on the outer surface of notebook computers has provided consumers with more novel experiences, capturing significant market attention. A number of form-factors were progressively rolled out for single-screen mobile phone products. Conventional monochrome display models have also been joined by mobile phones with color displays (E Ink Kaleido™).

In addition to the convenience of portability and the eye-friendly nature of EPD, Lenovo continues to integrate EPD into its notebook computer products. From the touch-sensitive keyboard on the C-side to the display screen on the A-side, Lenovo showcased the Thinkbook Plus Twist at this year's CES, featuring a flip design and equipped with E Ink Kaleido™. It has received high praise for its innovative features.

ASUS has also made new attempts by placing Spectra™ 6 on the C-side of laptops. Although not used as a regular display, it can display colorful artwork, adding a personal touch. The vibrant colors of Spectra™ 6 make the product more eye-catching. Besides laptops, ASUS has also incorporated a 4” Spectra™ 6 into Mini PCs, which is also a novel approach.

In addition to laptop applications, the vibrant colors of the Spectra™ series have also inspired manufacturers to create iPhone back covers using E5/Spectra™ 6. Utilizing ePaper's ability to be directly driven by a mobile phone’s NFC, the phone back cover requires no battery at all, adding new functionality to the phone's back. Beyond adding a new dimension of personalization, it also opens up new possibilities for the phone beyond its original purpose.

G. Digital Signage

In the IoT world, where information is everywhere, the ability to provide useful and accurate information at the right moment is very valuable. Drawing on the existing strengths of ePaper, such as low-power consumption, viewable under sunlight and paper-like attributes, E Ink has secured a commanding advantage in the Digital Signage market.

Digital Signage has many applications in public places such as smart transportation, smart retail , smart education, smart healthcare, museums, and libraries. ePaper Digital Signage is clearly viewable under direct sunlight. It can even run on solar power and be updated through the existing network without the need for complex and expensive construction. ePaper Digital Signage is ideal for installations in urban areas and suitable for installation in remote areas or places with no power lines.

Environmental impact is an important consideration for commercial users and governmental agencies assessing the installation of Digital Signage. ePaper's ultra- low power consumption makes ePaper Digital Signage an excellent choice as an environmentally sustainable green product. ePaper Digital Signage System's minimalist design requires no additional components such as fans or air-conditioning. It can therefore be made lighter, more compact, and easier to install. Under certain circumstances, they can even be installed onto existing infrastructures. Benefits include quick installation as well as a reduction in the total cost of installation and ownership.

Digital Signage solutions are generally expected to operate over several years once installed. Total Cost of Ownership (TCO) is a key factor determining the Return on Investment (ROI). Owing to its extremely low cost in power consumption and maintenance as well as ease of installation, and long-term reliability, ePaper Digital Signage serves as a sustainable solution offering both low TCO and exceptional outdoor readability. Growing demand for Digital Signage plus E Ink's product advantages in the market should see it make a very significant contribution to Company revenues over the next few years.

Most of the growth in demand for Digital Signage currently comes from Europe, North America and Asia. Most signages are still static paper products for now and can only be replaced manually. Demand from signage replacement has helped E Ink establish a solid foothold in the growing digital signage market. We've also improved on the existing monochrome ePaper digital signage by adding more colors platform such as Spectra 6 and Kaleido to toward into color ePaper digital signage.

E Ink has been actively collaborating with major Signage brands, and this year has seen further progress. Firstly, Philips launched the Philips Tableaux series of color signage using Gallery™ Plus, and continued to collaborate on the development of large-sized Spectra™ 6 displays. In addition to Philips, Samsung and Sharp have also successively developed large-sized color ePaper signage. In particular, Samsung showcased its color ePaper signage at both ISE 2024 and Infocomm 2024, attracting significant customer attention. As we move into 2025, major brands are demonstrating color ePaper signage at ISE. Furthermore, the 75" Kaleido™ 3 Outdoor display will be showcased simultaneously at the booths of multiple brands, further demonstrating the arrival of the color ePaper era. Pocketbook, a major European eReader manufacturer, has also actively invested in the development of large-sized color ePaper, creating its innovative application brand Inkposter. Using an MTK turnkey solution, Pocketbook officially released a series of products and application scenarios at CES 2025, receiving high praise from the audience.

Automaker BMW unveiled an innovative application of E Ink Prism™ on the surface of cars at CES 2022, allowing car owners to change the color and patterns of the car's body through a mobile app, opening up infinite possibilities. This sparked significant market demand, with inquiries pouring in from leading companies in various fields. At CES 2023, BMW once again incorporated Prism™ 3, integrating color ePaper into the car's body, showcasing the BMW i VISION Dee and further elevating the popularity of color ePaper. ePaper is not limited to car surfaces but can be applied to various objects such as motorcycles, bicycles, refrigerators, televisions, monitors, laptops, and any other surface. E Ink's slogan is "We make surfaces Smart and Green™." Although BMW's third-generation concept car did not make its debut at the 2024 CES, a Prism product nearing commercialization made an appearance. Lenovo applied Prism™ to the A-surface of their notebook, featuring a novel and eye-catching design that gives a new definition to notebooks, and it has become popular among customers. Additionally, the African mobile phone leader 'Transsion' has also launched a stylish design using Prism™ as the smartphone back cover. This innovative design breathes new life into the unchanging smartphone back cover. Beyond CES, customers also plan to showcase Prism™'s vibrant colors at future exhibitions, so let's eagerly await it.

4. Competition

E Ink is the uncontested world leader in ePaper technologies and products. EPD products are applied to the eReader market, where E Ink has a very high market share. Major eReader brand suppliers worldwide all use the EPD produced by E Ink. ePaper has been gradually replacing LCD products in ESL in recent years due to the characteristics and advantages of ePaper; penetration is also rising annually. Moreover, E Ink is leading in EPD in digital notebooks and is working with new customers to launch various products.

E Ink has many years of experience operating in such markets and a world-class R&D team, giving us a definite competitive advantage in developing technologies and products in the future.

4.1.3 Technology and R&D

E Ink continues to focus on the development of ePaper products and technologies. In addition to making continued advancements to the original black and white ePaper module products, we also actively invested in the commercial application of color ePaper products. Combined with the know-how in electronic shelf labels, flexible displays, and touch panels writing function, the Company has continuously released new products in the field of ePaper, which has received good market response. At the same time, we are actively expanding our production capacity to consolidate our leadership in the EPD market and maintain our sustainable and leading development in the highly competitive display industry.

In 2023, 2024, and up to the printing date in 2025, E Ink invested NT$3.65 billion, NT$4.35 billion, and NT$1.05 billion in R&D expenses, respectively.

(1) Electronic Ink Technology

Monochrome Ink Technology

For the electronic ink film technology platform, the E Ink Carta™ 1200 released in 2021 improved its response rate and contrast by 20% and 15% respectively compared to its predecessor (Carta™ 1000). The new Carta™ 1200 electronic ink film technology platform's monochrome contrast looks even more like printed paper. It supports 16 gray levels and is capable of display rendering and gradient visual effects. The crisp fonts and fine visual details are clearly viewable even under direct sunlight. It is light and thin, eco-friendly and can be read for extended periods. Applications include eReaders, electronic dictionaries, electronic reference books, and electronic magazines. Its fast response time makes it well-suited to eNote applications as well. The Carta™ 1200 represents the latest iteration of E Ink Carta™ technology. It can be used on all ePaper product types and sizes to improve response rate and contrast.

Color Ink Technology

- **Spectra™ 6**

  E Ink Spectra™ 6 is the latest technology in the Spectra™ series. It uses white, red, yellow, and blue charged color inks, controlled by voltage, to create high-saturation black, white, red, yellow, blue, and green colors. With advanced color mixing algorithms, it produces vivid color effects. The resolution has been improved to 200ppi, and the operating temperature range has expanded to 0 to 50 °C, providing retailers with more diverse display content options.

- **E Ink Marquee™**

  E Ink Marquee uses a new four-color particle display system, offering more vivid color effects and supporting a wide temperature range from -20°C to 65°C. The development goal reaches up to 75 inches, specifically designed for Digital Out of Home (DOOH) billboard applications, with a screen refresh time between 5 and 7 seconds.

  Marquee boasts excellent energy efficiency and thermal performance. Compared to traditional LCD or LED displays, it can operate without the need for a cooling system, significantly reducing system costs and providing a more cost-effective display solution for outdoor environments. Its seamless screen-switching capability greatly enhances the flexibility of interactive street installations and dynamic advertising platforms, further meeting the demands of brand marketing integration and programmatic advertising.

- **E Ink Spectra™ 3100 / Spectra™ 3100 Plus / Spectra™3100 Special Edition**

  E Ink Spectra™ 3100 is a four particle ink system which incorporates retailer's requests for additional color functionality, by utilizing black, white, red and yellow particles to offer vibrant color for rich content. Spectra™ 3100 has an improved update time, and an expanded temperature range for red and yellow states to satisfy retailers' needs to operate ESL tags in various environments within their stores. In addition, Spectra™ 3100 is offered in panels with an updated all-in-one driver IC that supports premium ESLs with higher resolution across various sizes. E Ink Spectra™ 3100 Plus introduces a new architecture of driving waveforms and adds a fifth vibrant and saturated color, "orange." In 2023, E Ink Spectra™ 6 color ePaper technology was introduced by E Ink. With its rich and saturated colors and support for various sizes from medium to large, E Ink Spectra™ 6 is suitable for indoor advertising signage applications in the retail industry. It can display poster-like images, providing a paper-like visual

experience. With battery usage and power consumption only during screen updates, it eliminates the need for wiring and allows flexibility for retailers to move products and shelves. The E Ink Spectra™ series can also be combined with E Ink™ Sparkle, which generates eye-catching flashing effects in specific patterns. This helps increase the visibility of advertising messages during promotional poster rotations, assisting retailers in strengthening product promotion activities.

- **E Ink Kaleido™ Plus / Kaleido™ 3 / Kaleido™ 3 Outdoor**

  E Ink Kaleido™ is a print color ePaper series developed exclusively by E Ink. It utilizes the Print Color Technology, combining electronic ink technology with a color filter array to transform black-and-white ePaper into a rich palette of 4096 colors using RGB mixing principles. Following the release of E Ink Kaleido™ Plus in 2021, E Ink has continued to improve the display performance. In 2022, E Ink Kaleido™ 3 was introduced, incorporating enhanced print color technology for better color rendering and printing effects, resulting in clearer fonts and more vibrant colors. The printing-based color filter array is closer to the electronic ink film, and adjustments have been made to minimize color mixing caused by scattered light, providing a superior and comfortable reading experience for color digital content. It is suitable for devices that display rich visual information such as tables, maps, images, textbooks, and advertisements. In 2023, E Ink launched E Ink Kaleido™ 3 Outdoor, a print color ePaper technology designed specifically for digital out-of-home (DOOH) advertising signage applications. It is suitable for larger temperature ranges in outdoor environments, featuring color dynamic display capabilities while maintaining the texture of a poster. It provides a colorful and rich information solution for outdoor public message signage, as well as a low-carbon environmentally friendly display solution. In addition to improved color performance, Kaleido™ 3 is equipped with E Ink ComfortGaze™, a front light design developed by E Ink's front light design team. The E Ink ComfortGaze™ front light technology reduces the amount of blue light reflected from the surface of the display, providing a more comfortable reading experience. Compared to the previous generation front light design, it reduces the Blue Light Ratio (BLR) and Blue Light Toxicity Factor (BLTF) by up to 60% and 24% respectively.

- **E Ink Gallery™ Plus / Gallery™ 3**

  The E Ink Gallery™ range uses four colors of electronic ink particles (cyan, magenta, yellow, white) and voltage control to dynamically mix particles and colors for a full-color display. E Ink Gallery™ was released in 2019 and its family gained two new members "E Ink Gallery™ Plus" and "E Ink Gallery™ 3" in 2022. E Ink Gallery™ Plus uses an all-new color ePaper driving waveform to improve color contrast by 40% compared to the original E Ink Gallery™. E Ink Gallery™ Plus is intended for indoor commercial signage in department stores and restaurants. It can also be used for public and information display signage in mass transit systems, airports, and similar fields to improve the color contrast of color ePaper and give images more depth. The result is dynamic color posters with a greater visual impact. E Ink Gallery™ 3 focuses on improving page turning speed and display resolution. The page turn speed for monochrome text on E Ink Gallery™ 3 was improved to 350 ms. The refresh rate for color displays was greatly improved as well to 500ms in fast color display mode, 750 to 1,000ms in standard mode, and 1,500ms in optimal mode. This was a clear improvement over the 2s refresh time for monochrome displays and 10s refresh time for color displays of the first-generation technology. Resolution was increased from 150 ppi to 300 ppi and operating temperature expanded to become 0 to 50°C. This aligned with the operating environment and product specifications of eReaders based on monochrome ePaper. E Ink Gallery™ 3 supports digital handwriting too. Writing delay is as little as 30 ms and several colors of handwriting are available in addition to monochrome. At the same time, E Ink ComfortGaze™, the latest front light technology developed by E Ink, was adopted by E Ink Gallery™ 3 as well. Reducing the amount of blue light reflected off the surface of the display delivers a digital reading experience with low blue light and vision health. E Ink Gallery™ 3 is suitable for eReader and eNote market applications.

(2) Multi-color ePaper for Architecture and Art Design

E Ink Prism™ is a dynamic display material utilizing multi-color ePaper technology. It is a product of ePaper's active expansion into diverse applications, breaking away from the traditional display framework and possessing significant potential for future development. Prism™ materials can perform

static displays without consuming power, or sense external movements to dynamically display integrated architectural products, completely transforming display spaces, and creating unique interactive environments. Prism™ has several characteristics: it is fully programmable to provide content providers and designers with greater creative freedom, it is fully reflective to provide a visual experience similar to prints or artwork and a natural visual experience, and its low power consumption means that only a small amount of power is needed when visual effects are changed, making it so energy-efficient that power sockets are not needed.

The new generation of multi-color ePaper FPL film, E Ink Prism™ 3, launched in 2023, reduces the design gap between traditional static materials through dynamic display digital technology. Through programmable editing of the color dynamics of multi-color ePaper, designers will be able to integrate dynamic color changes and pattern designs into various types of materials. At the CES 2023 exhibition, E Ink Prism™ 3 technology was first applied in the automotive field, as the top international automotive brand BMW used E Ink Prism™ 3 technology to create the new concept car BMW i Vision DEE, which features multi-color changing body surfaces, bringing a refreshing and visually stunning experience to the public.

(3) Flexible EPD

E Ink Mobius™ is a flexible ePaper developed by E Ink. It uses amorphous silicon or organic TFT in its design and manufacturing process, integrating flexible backplanes and modules with plastic material stacking stress matching design. This results in a plastic display that is flexible, lightweight, shock-resistant, breakage-resistant, and easy to carry, achieving the goal of being lightweight and less prone to damage. Flexible ePaper allows customers to incorporate conformal design elements into their product designs, enabling products to have unique aesthetic and functional features. This technology has been widely adopted in the market.

Flexible ePaper modules with plastic backplanes are sturdy and far lighter than glass. They are also thinner and lighter than existing ePaper with glass backplanes, an important feature for larger products. Flexible ePaper technology serves as a crucial foundational technology for advancing foldable ePaper technology.

(4) Front Light and Touch Panel Technologies

In today's digital age, it is often challenging for people to reduce their screen time. Research conducted by the Harvard School of Public Health indicates that ePaper, which is free of blue light, is less harmful to the eyes compared to LCD screens. When combined with E Ink ComfortGaze™ Front Light technology, ePaper is three times better for eye health. By shifting some of the time spent looking at screens to healthy EPD suitable for reading and writing, individuals can maintain their connection to the digital world without sacrificing their eye health.

Comfortably reading in nighttime and low-light environments has always been a requirement for eReaders. E Ink's Front Light technology has been implemented in mass production, enabling comfortable reading even at night. Additionally, the self-developed Front Light technology that allows adjustment between cool and warm color temperatures has been adopted by customers and is being mass-produced. This allows consumers to fully enjoy the convenience brought by eReader technology, further diversifying the applications of ePaper.

In terms of touch ePaper displays, in addition to the commonly used capacitive touch technology, E Ink is actively developing touch patterns suitable for ePaper to improve the signal-to-noise ratio and is collaborating with manufacturers to develop various touch modules to enhance product performance and versatility. Furthermore, E Ink has also developed ePaper modules that integrate active pen technology. These modules not only possess the characteristics of paper-like reading but also allow easy writing and marking on electronic documents. In addition to replacing conventional books, they provide greater convenience in terms of usability.

(5) EPD with Wireless Energy Harvesting Technology

The ultra-low power consumption feature of EPD makes it possible so that it can be powered using wireless harvesting technology. The small amount of electricity generated by wireless transmission is sufficient to drive and refresh the EPD without a battery.

For short-distance applications, NFC receivers can be used in eWallets, eBadges, and even eReaders and smartwatches. In long-range applications, they can be applied to transportation application systems, retail electronic shelf labels, electronic luggage tags for logistics, warehouse automation systems, as well as smart cards, smart homes, eBulletins, and digital signage. Currently, WLC (Wireless Power and

Communication) technology is being utilized to wirelessly power color ePaper in these applications.

4.1.4 Long- and Short-Term Business Development Plan

(1) Short-Term Business Development Plan

A. To follow the current product roadmap on the promotion of standard products, performance upgrades for existing products, and provision of total system solutions.

B. To secure adoption by more leading international vendors through better product quality and more comprehensive manufacturing services.

C. To establish local support systems as well as strengthen distribution channels for customers in the US, Europe, China and Japan.

D. To establish an ePaper ecosystem, expand FPL sales channels and work with more display module vendors to expand ePaper applications

E. To establish ePaper-related ecosystems: Work with more ecosystem partners to develop ePaper driving IC and with TFT backplane vendors to develop more ePaper applications.

(2) Long-Term Business Development Plan

A. In addition to focusing on the research and development of advanced technologies such as Advanced Color, E Ink Spectra™, Print Color, Foldable and Low Power, upgrade our production processes, and continue to invest in developing a comprehensive patent portfolio that maintains our technological leadership.

B. To continue promoting new application markets and cultivate the ecosystem. We will integrate the upstream and downstream industries to jointly develop products and applications that are even more complete and have greater value.

C. To build a highly-efficient marketing and operating model that integrates marketing channels, products, research and development, and production into a seamless team that will effectively support commercial development to achieve a win-win outcome for E Ink and customers.

4.2 Market, Manufacturing & Sales Overview

4.2.1 Major Markets

Unit: NT$ thousands

Region	2024		2023	
	Sales Amount	%	Sales Amount	%
Taiwan	501,569	2	754,531	3
Asia	27,569,655	85	23,109,878	85
America	3,769,055	12	1,639,072	6
Others	322,854	1	1,616,274	6
Total	32,163,133	100	27,119,755	100

4.2.2 Market Share

Reflective display technology is one of the essential technologies in the overall display industry, and E Ink's ePaper technology is the main representative of reflective display technologies. E Ink is currently the only manufacturer that can mass-produce ePaper film products with stable and high quality. E Ink maintains a high share of the global reflective display market. With E Ink's core technology, E Ink has become synonymous with green and sustainable display technology.

According to data compiled in 2024 by CINNO and ePaper Insight, the editorial team of the White Paper on the Development of the E-Paper Industry, the estimated global shipment volume of ePaper devices in 2024 is approximately 350 million units. The ePaper industry has entered a phase of rapid growth, with the electronic shelf label (ESL) market expected to maintain steady and sustainable expansion in the future.

The applications and products of ePaper are diversifying beyond the well-established eReaders and ESLs. Several emerging applications are gradually reaching maturity, including ePaper notebooks (eNote), ePaper luggage tags, logistics labels, reusable transit containers, returnable packaging boxes, pharmaceutical labels, hospital room signs and bedside communication boards, as well as ePaper digital signage. These innovations are becoming key drivers in expanding the adoption of ePaper technology.

Electronic Shelf Labels (ESLs) have been one of the fastest-growing ePaper applications in recent years. Despite this rapid expansion, the market penetration of ESLs remains below 10%, presenting significant growth potential. As a key supplier of ePaper film, E Ink holds a long-term competitive advantage in this vertical.. According to a Morgan Stanley research report (released on August 1, 2024), ESLs have been proven to bring significant economic benefits to retailers over the past few years. The penetration rate is expected to increase from 9% in 2023 to 20% by 2026, indicating a compound annual growth rate (CAGR) of 25%. As retailers seek to enhance profitability by improving ESL operational efficiency, this trend is expected to accelerate. Looking forward, Morgan Stanley anticipates continued growth opportunities in the European market, while is likely to experience accelerated expansion from a relatively lower base.

In response to global sustainability concerns, light pollution, energy shortages, and European energy-saving legislation, E Ink's applications will extend to Digital Out of Home (DOOH) advertising signage and logistics applications, providing eco-friendly, low power consumption, and light-pollution-free digital signage technology to achieve the 4R (Reuse, Recycle, Replace, Responsible) goals. By extending its ePaper solutions into various environments, E Ink aims to increase adoption and expand its market share across multiple application areas.

4.2.3 Market Supply, Demand and Growth

Consumer Electronics

The eReader and eNote market is experiencing steady growth, with an increasing number of brands launching new products featuring E Ink Kaleido™ 3 and E Ink Gallery™ 3 technologies. These innovations offer end users two distinct color display options, breaking the traditional black-and-white limitation of eReaders. Color ePaper enhances the diversity of digital content, enabling richer reading experiences for business books, magazines, comics, and more. This, in turn, drives higher consumer acceptance and contributes to the overall expansion of the eReader and eNote market.

eNotes are trending toward larger screen sizes, driven by collaboration with downstream software and hardware providers, content developers, system integrators, and various application sectors. Beyond

personal reading and note-taking, these devices are increasingly adopted in professional and educational markets, where they serve as powerful tools for enhancing work and learning efficiency.

Trends such as artificial intelligence, sustainability, and health awareness will accelerate the product development and technology. These advancements not only replace paper books but contribute to the ongoing transition away from single-use paper.

As the impact of blue light on eye health continues to attract attention, leading monitor companies have begun to introduce ePaper as primary computer screens or secondary screens, which are well-suited long-duration tasks such as document reading and office work. Unlike traditional LCD screens, ePaper utilizes reflective display technology and is non-emissive, significantly reducing blue light exposure and minimizing discomfort or potential eye strain caused by prolonged screen use.

Furthermore, major consumer product manufacturers are also adopting ePaper to add color to their products and creating product differentiation in the market. The leading mobile phone brand in Africa region, Infinix Mobile, targeting young consumer group in emerging markets, unveiled the color ePaper smartphone 'E-Color Shift' featuring E Ink Prism™ 3 at CES 2024. The multi-color ePaper on the back of the phone allows users to change colors according to their mood, and it doesn't require any power to maintain the display, creating a unique personalized style. Cream Guitars, a new brand from the UK dedicated to providing innovative instruments and equipment for music enthusiasts, launched a guitar equipped with multi-color ePaper display technology. This guitar can change colors in real-time during performances, adding a new visual dimension to concerts and shows. Lenovo continues to incorporate ePaper displays into its laptop products, from the touch keyboard on the C-side to the display on the A-side. This year at CES, they showcased the ThinkBook Plus Twist, featuring a flippable color display powered by E Ink Kaleido™, which was well-received. ASUS has also made new attempts, designing color ePaper into the lid of its laptops and its new Mini PC. While not used as a general display, it can display colorful artwork, adding personalized elements, making the products more eye-catching and intuitive through color ePaper.

In the high-end consumer sector, international premium car brand BMW and E Ink jointly unveiled multi-color concept cars built with ePaper at CES for two consecutive years (2022, 2023). In April 2024, they collaborated again to create the new BMW i5 Flow NOSTOAKATA. Using multi-color ePaper with artificial intelligence, AI is no longer just a cold technology, and the colorful car body showcases the possibilities of human-machine interaction applications, and continuous efforts are being made towards mass production. Delvaux, a luxury leather goods brand from Belgium, launched a limited-edition handbag during Paris Fashion Week. E Ink and Delvaux worked closely together, striving to push the boundaries of technology, ultimately creating a product that integrates material innovation and leather craftsmanship, bringing a unique and personalized consumer experience.

Non-consumer products and application fields

According to Statista, global revenue for Digital Out-of-Home (DOOH) advertising is projected to reach approximately US$20.4 billion in 2024 and approach US$30 billion by 2029. eMarketer forecasts that global retail media network (RMN) advertising expense will reach US$140 billion in 2024, accounting for one-fifth of the global digital advertising market. E Ink is also developing medium-to-large-sized color ePaper signage for advertising and information board applications, providing a sustainable solution with low total cost of ownership (TCO) and excellent visibility. These color ePaper signage solutions are designed to operate in a wide range of outdoor temperatures while supporting dynamic color displays with a poster-like visual quality. They provide vibrant, multi-color content for public information boards while maintaining low-carbon, ecofriendly benefits.. With ultra-high color saturation, ePaper signage serves as an alternative to traditional printed posters, reducing manual replacement costs, improving timeliness, and enhancing flexibility in content updates.

As smart cities continue to develop, digital signage applications facilitate information communication while needing to balance energy conservation, ecological environment protection, and urban aesthetics, becoming a key challenge for sustainable smart cities. Cities are committed to ensuring that the public can obtain information through safe and accurate methods, while also considering reducing the carbon footprint generated by the operation of smart transportation and outdoor advertising signage solutions. Reflective ePaper features non-emissive and ultra-low power consumption. ePaper signage devices can be combined with solar or other renewable energy power supply systems, eliminating the need for additional power supply from the grid, without wiring restrictions, can be placed anywhere, and can be wirelessly networked, making the operation of ePaper signage a zero-carbon emission device, providing humans and the environment with a light-pollution-free, zero-carbon emission, and eco-friendly digital signage solution.

E Ink ePaper product applications have spread to tens of thousands of transportation and public areas at home and abroad, including smart bus stop signs, public information boards, parking meters, parking signs, and fuel price signs. Utilizing ePaper's characteristics of continuous display without power consumption and low power consumption, it can also create diverse indoor applications, such as color advertising grab handles and full-color ePaper advertising and information signage used in subway or hybrid train carriages. E Ink is partnering with multiple manufacturers to introduce ePaper bus stop signs around the world.

Since March 2023, the EU has updated its energy labeling legislation, and low-carbon and sustainable electronic products are the current mainstream trend. ePaper, which consumes no power when the screen image is not changed, has ultra-power-saving characteristics and is the best smart low-carbon display. ePaper information and advertising signage has great market potential and still has much room for growth in the future.

Process digitalization and paperless production are the main application use cases of ePaper in smart factories. E Ink partnered with system integrators to combine ePaper with smart manufacturing solutions such as eBadges, ePaper process cards, ePaper inspection checklists, ePaper handover lists and warehouse management tags, along with a design that is easy to install for quick integration, help enhance operational efficiency on the manufacturing floor and assist in realizing a paperless smart factory. Extensive use of E Ink ePaper in manufacturing facilities paves the way to smart and green manufacturing with Net Zero Carbon Emissions. In October 2023, E Ink collaborated with AIOI Systems to integrate E Ink Kaleido™ 3 color eNote into the AIOI smart device inspection system. This integration allows the system to digitize paper forms, reducing paper waste, and connect with smart tags to provide an ultra-low power digital information solution. Scheduled for implementation in April 2024 at a leading Japanese comprehensive electronics manufacturer, it is expected to play a significant role in facilitating the digital transformation of various control equipment and equipment inspection operations.

With the demand for digital transformation and net-zero carbon emissions policies, airlines, electronic bag tag (EBT) system integrators, and E Ink are collaborating to introduce electronic bag tags into airports. Alaska Airlines recently launched a newly upgraded electronic bag tag, continuing to enhance the check-in experience, marking two years since the technology was first introduced in the United States. Electronic Bag Tag (EBT) uses wireless transmission and energy harvesting technology with flexible ePaper, is deployed in the aviation industry. It uses airline application software (APP) to obtain authorization in the cloud to generate electronic bag tags, using the built-in NFC of mobile phones to harvest energy, and thus complete data communication and update the information on the display. It can effectively speed up luggage handling, shorten waiting time, and reduce the chances of lost luggage. EBT has been implemented in various airlines, including Qatar Airways, British Airways, Air France-KLM, Alaska Airlines, Qantas, Lufthansa, Swiss International Air Lines, Austrian Airlines, China Eastern Airlines, China Southern Airlines, and etc.

In smart retail, the digital transformation of brick-and-mortar stores in Europe, the United States, Japan, mainland China, and North America is becoming more prevalent, with electronic shelf labels (ESLs) widely used. In Southeast Asia and emerging markets, there is a gradual adoption of ePaper ESLs and advertising signage solutions. The global market continues to show positive trends. Many international leading retailers have extensively adopted ESLs and accompanying software systems. Small and medium-sized retailers following their example helped boost penetration in the retail field. To address the omnichannel integration trend, retail stores are also beginning to use ePaper signage as a medium for retail advertising. The combination of ePaper ESLs, retail advertising signage, and online sales strategies enhances the flexibility, sustainability, overall operating efficiency, and service quality of the retail industry. At the same time, the low power consumption property of ePaper can help retailers accelerate the achievement of zero-carbon emission sustainability goals. By integrating with price management system software, electronic shelf label systems eliminate the need for manual replacement and verification of paper label content, and can help solve staffing shortages in stores, connect online and offline omnichannel marketing, and improve precision marketing.

For smart healthcare, ePaper's low-power and light-pollution-free characteristics have already become the new standard in many domestic and overseas smart hospitals. ePaper's bistable characteristics support the continuous display of information even without power, and its non-emissive and blue-light-free properties do not disturb resting patients. Also, its easy installation, good visibility, lightweight, ruggedized and sanitizable properties make it a suitable display for healthcare IoT products or wearable and portable

smart medical devices. In addition to patient communication boards, ward door signs, healthcare information boards, waiting room check-in system, pharmacy dispensing labels, badges, movable epidemic prevention information signs, electronic medical records, and digital form signing systems, ePaper applications in smart healthcare can also be integrated with artificial intelligence systems. These can be used for triage prompts at health check stations, remote medical care, or wearable medical products, such as glucometers, physiological information monitoring watches, AI-aided digital stethoscopes, and fall prevention notification systems.

In 2024, Kuang Tien General Hospital introduced a color ePaper outpatient check-in system, using large-sized E Ink Kaleido™ 3 Print Color ePaper technology to replace traditional check-in systems. Compared to traditional display screens, it maintains the characteristic of not consuming power while displaying a static image, and can greatly reduce power consumption. It can also switch to displaying information during off-hours, providing health education information services. The color ePaper health education signage uses E Ink Spectra™ 6 technology, replacing traditional paper health education posters with 32-inch Spectra™ 6 ePaper signage. E Ink Spectra™ 6 has the characteristics of vivid and saturated colors, creating a comfortable medical environment with saturated color performance. In addition to providing patients with real-time information, it can also use AI cloud services to generate different images in response to festivals when not in use, turning the waiting area of the clinic into a digital art gallery. By integrating aesthetics, sustainability, and technology, it creates a professional and humanized recreational space while meeting the goals of low-carbon sustainability.

The 13.3-inch movable ePaper signage in the pharmacy dispensing area does not need to be connected to a power cord and can be placed freely. By providing integrated hardware and software equipment and information display system services, ePaper device takes in various media formats according to different needs, and the contents are transmitted to ePaper devices in real-time through a wireless network, enabling quick and efficient real-time updates of display content. Combined with stanchions, it can immediately assist on-site personnel in guiding traffic flow in response to queuing situations, reducing the workload of medical and administrative teams. Integrating AI translation provides multilingual medication instructions, allowing caregivers with different language backgrounds to more accurately understand medication information.

The smart bedside system in the ward area connects to the Kuang Tien General Hospital's inpatient e-concierge system through color ePaper patient communication boards. In addition to providing auxiliary information for medical staff's care and treatment, patients, caregivers, and children working away from home can also independently check various examination schedules and post-operative precautions, reducing information gaps between patients, family members, and caregivers. This not only makes Kuang Tien Hospital the strongest and most powerful support for family members working away from home but also enhances medical communication between medical teams and relatives, thereby improving medical service efficiency and patient hospitalization quality and creating a sustainable medical environment.

4.2.4 Competitive Advantage

A Great Leap Forward in Color Technology

E Ink continues to advance color ePaper technology, developing diverse solutions tailored to different markets and applications. By offering a wide range of color display options, E Ink enables end users to select the most suitable technology for their needs. Furthermore, E Ink’s innovations allow multiple color ePaper technologies to coexist and operate seamlessly within the same environment, unlocking new possibilities for integrated display ecosystems. This approach not only enhances visual diversity and operational flexibility but also supports net-zero carbon emissions initiatives by promoting sustainable digital display solutions.

For retail advertising and signage market, E Ink introduced a new color platform, E Ink Spectra™ 6 in 2023. This platform utilizes four-color particles to create six primary colors: black, white, red, yellow, blue, and green, and features an enhanced color spectrum and an advanced color imaging algorithm to provide full color, improving marketing and advertising performance. The highly saturated full color E Ink Spectra™ 6 has been adopted by Sharp and PPDS (Philips Professional Displays), etc. for the applications such as ePaper posters, POPs and advertising signs. In 2024, E Ink launched E Ink Spectra 6 Plus, featuring a 50%

improvement in page-turning speed and a low-flashing page-turning process to continually advance the technological competitive edge in color electronic ink.

For the outdoor signage market, we are developing medium-to-large sized ePaper signage suitable for outdoor use, based on E Ink Kaleido™ 3 Outdoor technology. Through the optimization of TFT, print color technology, image driving algorithm, and materials, the applicable temperature range has been expanded from 0°C - 50°C to -15°C - 65°C. This technology can be applied to outdoor advertising signage, replacing current energy-consuming LCD/LED advertising signage. Without adding the expensive high-energy heating or cooling devices, ePaper signage is able to function normally while reducing additional power consumption. Facing the global common goal towards sustainability, ePaper signage is currently the most widely used and solar panel-driven reflective display technology in the market. The low power consumption makes them self-sustaining zero-carbon emission devices when powered by renewable energy sources. It is a crucial digital display technology for the development of low-carbon smart cities.

For smart surface applications, E Ink is exploring the possibilities of smart color changing across various industries and applications through E Ink Prism™ 3 ePaper technology. By utilizing hundreds of segmented ePaper displays, E Ink enables programmable, dynamic color transitions, redefining the concept of surface transformation. This groundbreaking approach unlocks new possibilities for adaptive, interactive, and aesthetically versatile designs in smart environments.. In addition to being most widely known for its application on the surface of BMW's new concept car, the BMW iX Flow NOSTAKANA, and Delvaux's multi-color limited-edition handbag, Continental's unveiling of a customizable emotional cockpit and B-pillar equipped with E Ink ePaper was also a highlight at CES 2025.

Advancing Low-Power Technology, Supporting Sustainable Development

From ePaper materials, driving schemes, ePaper display module manufacturing to application scenarios, E Ink continuously refines its R&D efforts with sustainability as its highest guiding principle. In 2023, a battery-free color eBadge and cloud solution were developed using a 4.01-inch E Ink Gallery™ color ePaper. In 2024, solar-powered ePaper bus stop signs are also gradually being changed from using monochrome ePaper panels to color ePaper panels. This demonstrates that ePaper's low power consumption and visibility contribute to environmental sustainability, user-friendliness, and application service diversification.

Implementing battery-free design in color eBadge enhances security, extends lifespan, and lowers hardware costs and weight. Implementing battery-free ePaper card into a health examination process helps patients quickly and intuitively identify the next examination station, and contributes to time-saving for patients, streamline healthcare guidance personnel, and improve overall health examination efficiency. Furthermore, the battery-free color ePaper tag/card solution, with its reusable and ultra-low power characteristics, will help more industries and applications move towards net-zero carbon emissions.

E Ink continues to invest in the development of low-power ePaper technology. In addition to leveraging its environmentally friendly existing technology advantages, the company will continue to refine techniques such as display module structure reduction, materials reduction, and low power consumption. Based on the principles of carbon reduction, energy conservation, recycling, and innovation, E Ink aims to create products with even lower carbon footprints.

Product Sustainability and Competitiveness

According to the Green Revenues 2.0 data model released by FTSE Russell in 2024, 99.9% of E Ink's revenue was considered green revue. E Ink aims to replace once-off disposable paper use, and green and smart surfaces would make the devices net-zero products. As industries go through digital transformation, the accelerated adoption of low-carbon, dynamic and paper-like ePaper devices will not only reduce the consumption of more environmental resources, but also help to significantly reduce CO_2 emissions and increase the contribution to environmental sustainability. For example, installing solar-powered ePaper bus stop signs at the 64,000 bus stops in Taiwan's major cities can save 40,000 metric tons of CO_2 per year compared to traditional LCD signage. As of 2024, about 1.5 billion 3-inch ESLs (most common for retail) have been installed worldwide. Suppose prices are changed four times a day. In that case, the CO_2 emissions generated using once-off disposable paper labels are 32,000 times of ESLs. Based on the 160 million eReaders currently in circulation globally, using digital reading to replace the purchase and reading of printed books, and assuming each eReader downloads an average of 10 books per year, reading on paper books or LCD tablets would generate 90,000 times and 50 times more carbon dioxide emissions, respectively, compared to using an eReader. Moreover, ePaper display technology is currently the only low-

light pollution display technology certified by the International Dark-Sky Association. 9 countries worldwide have enacted light pollution prevention as national legislation, and 19 states in the United States have light pollution control laws. According to Statista, a market research firm, the global green technology and sustainability market is forecast to reach US$16.5 billion in 2023 and grow to US$61.9 billion by 2030. ePaper display technology is positioned as the optimal green display technology for cities and businesses undergoing digital transformation.

Since 2018, E Ink and partners have deployed 1,500 solar-powered ePaper bus stop signs in Shanghai Puxi. The signs have been performing stably on solar power for five years. In quantifying the carbon footprint of 1,500 ePaper bus stop and real-time bus arrival information systems according to the ISO 14064-1 standard in 2022, it was found that only 42.9 metric tons of CO_2e is emitted annually, which is significantly lower than bus stop signs that use TFT-LCDs. Thus, purchasing 50 metric tons of carbon credits (CCER) generated by solar PV to offset the emissions. The PAS 2060:2018 standard and passing of the on-site inspections announced that the 1,500 solar ePaper bus stop sign systems in Shanghai Puxi achieved the carbon-neutral goal. In April 2023, Shanghai will continue its second phase of construction and promotion, organizing various suburban areas to advance the construction of ePaper bus stop signs. The goal for Lingang New Area and five new districts including Nanhui New Town, Jiading New Town, Qingpu New Town, Songjiang New Town, and Fengxian New Town is to achieve a coverage rate of ePaper not less than 50%.

4.2.5 Favorable/Unfavorable factors for long-term development and countermeasures

Favorable factors: Sustainable Development Became a Global Priority

As growing global awareness of sustainability development increases, the manufacturing industry is actively taking low-carbon and sustainable materials into consideration in production and procurement. ePaper technology is known for energy-saving, green, and low-carbon applications and environmental benefits, in line with the principle and requirements of sustainability, is conductive to the promotion and adoption.

Many private enterprises and government agencies are also actively advocating for the reduction of single-use disposable paper and moving towards paperless operations. ePaper can present information in a paper-like, blue light free, eye friendly and ultra-low power consumption interface. It can be reused and provide real-time information. It helps industries engage in digital transformation to reduce paper waste, power consumption and carbon emissions.

Favorable factors: Demand for eye friendly displays

In recent years, the issue of blue light has drawn attention from both consumers and industries. People are becoming increasingly aware that prolonged exposure to emitting displays poses a threat to eye health. This may also disrupt the secretion of melatonin, leading to sleep disorders, headaches, and other negative effects. For students in their developmental years, it could result in irreversible damage to vision, while for middle-aged and elderly individuals, it presents a significant burden on eye health.

E Ink's ePaper has obtained the first "Paper Like Display" certification from TÜV Rheinland, with a Paper Similarity Index (PSI) score of 86. Furthermore, according to research from the Harvard School of Public Health, ePaper devices without a front light do not emit any light to stress retinal cells. Furthermore, with E Ink ComfortGaze™ front light were up to three times less stressful for retinal cells than LCD devices.

In view of this, E Ink advocates for Healthier Screen Time for school-aged children, teenagers, and the elderly, aiming to create eye-friendly display technology options through the ePaper's paper-like and non-emissive characteristics. This initiative seeks to promote the well-being of people worldwide.

Favorable factors: Digital transformation

The development of IoT and smart city is the long-term trend of the future market, promoting the rapid increase of all kinds of connected devices in business and life. When everything is connected, the display screen will act as the communication interface between people and devices. ePaper's bistable and reflective characteristics, different from the conventional self-emitting display technologies, maintain the same image with zero power consumption over time, offer a paper-like reading experience, and provide a tangible feeling when writing. This eliminates excessive power consumption and environmental light pollution. Long-term use can significantly reduce energy consumption, helping various industries achieve green digital transformation.

Unfavorable factors: Rapid Changes in Global Supply Chain, Geopolitics

Due to the continuing strong demand for ePaper, E Ink is not only increasing capital expenditures to expand production capacity at regional production bases to address potential future capacity shortages. E Ink accelerated the establishment of local offices to serve local customers, a Netherlands office officially began operations in 2024 to improve customer service satisfaction. In response to the global supply chain restructuring caused by geopolitical changes, as well as the resulting management complexity, E Ink aims to comprehensively improve the resilience of its ePaper supply chain. Efforts are focused on strengthening the transparency of the supply chain, increasing the diversity and interchangeability of suppliers and transportation networks, and reducing production complexity and risk. By increasing automation, production costs are reduced. Additionally, by ensuring the production capacity and yield of ePaper films are effectively enhanced, and deepening cooperation with material partners, E Ink aims to ensure that capacity and quality meet market demands.

E Ink is committed to building an ePaper ecosystem, realizing diverse smart applications, and promoting the popularization and diversified development of low-carbon ePaper applications by combining software/hardware vendors and upstream/downstream supply chains of various application industries. The E-Paper Industry Alliance (EPIA) was founded in December 2020 and has 197 members as of the end of 2024, showing corporate solidarity and consensus within the industry ecosystem. Centered on green, low-carbon ePaper and digital development policies, E Ink continues to deepen its presence in eReading, new retail, education, transportation, healthcare, industrial applications, aviation, logistics, and office solutions. The company remains dedicated to advancing toward a smart living ecosystem and a sustainable city vision.

4.2.6 Application and production processes of key products

1. Application

   E-Paper Display is mainly primarily used as a display device designed for the delivery/presentation of information transmission.

2. Production process

   The E-Paper Display production process is divided into two stages: Front Panel Laminate (FPL) and E-Paper Display (EPD).

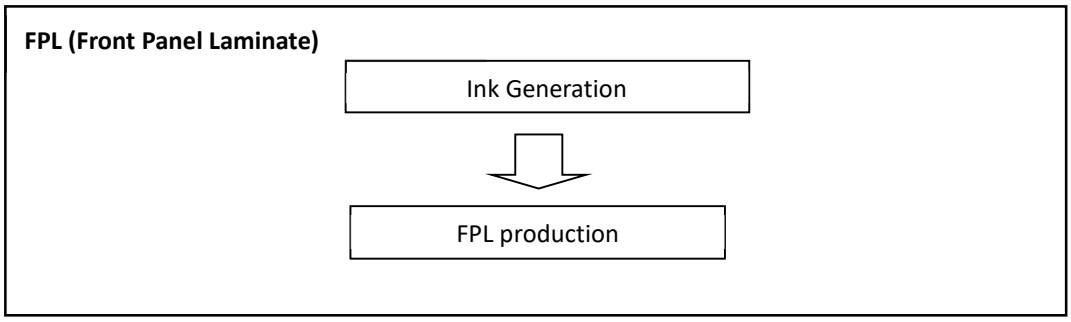

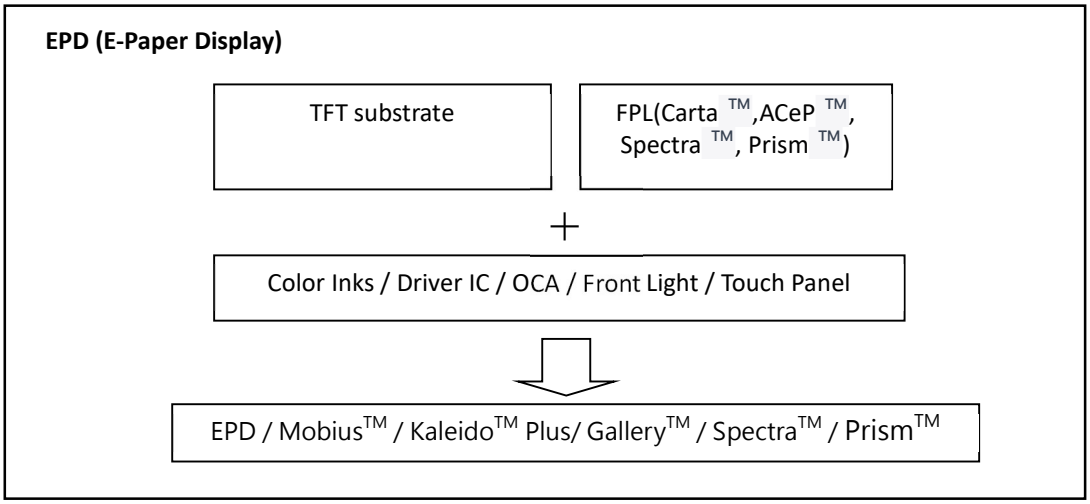

4.2.7 Supply status of key raw materials

E Ink's main raw materials include TFT back panel, touch panel and driver IC. Each of these raw materials has at least two primary suppliers. The Company has maintained a close relationship with the supplier for stable supply after the raw material certification. In addition to fully controlling the source of goods and the quality and delivery date, E Ink can minimize the risk of material shortages.

4.2.8 Major Suppliers and Clients

A. Major Suppliers in the Last Two Calendar Years

Unit: NT$ thousands

Year / Item	2024				2023			
	Company Name	Amount	Percentage of the annual net purchase (%)	Relation with Issuer	Company Name	Amount	Percentage of the annual net purchase (%)	Relation with Issuer
1	E	1,645,307	12	Affiliate Company	A	1,172,331	15	None
2	H	1,319,507	10	None	E	1,001,451	12	Affiliate Company
3	Others	10,200,590	78		Others	5,849,358	73	
	Total	13,165,404	100		Total	8,023,140	100	

Note 1: The names of suppliers whose total purchase amounts account for more than 10% of the total purchases in the past two fiscal years, along with their respective purchase amounts and percentages, should be disclosed. However, if the contractual agreements prohibit the disclosure of supplier names, or if the transaction counterpart is an individual who is not a related party, the supplier may be identified by a code.

Note 2: The changes in the increase or decrease are primarily attributed to variations in the sales product mix.

B. Major Clients in the Last Two Calendar Years

Unit: NT$ thousands

Year / Item	2024				2023			
	Company Name	Amount	Percentage of the annual net sales (%)	Relation with Issuer	Company Name	Amount	Percentage of the annual net sales (%)	Relation with Issuer
1	I	7,124,883	22	None	I	5,006,940	18	None
2	K	4,522,586	14	None	K	4,774,197	18	None
3	P	3,947,415	12	None	-	-	-	
4	F	3,214,354	10	None	-	-	-	
5	Others	13,353,895	42		Others	17,338,618	64	
	Net Sales	32,163,133	100		Net Sales	27,119,755	100	

4.3 Human Resources

Year		2023	2024	As of March 30, 2025
Number of Employees	Manager level	290	295	288
	IDL(non-manager)	1,340	1,344	1,356
	DL	1,157	1,259	1,213
	Total	2,787	2,898	2,857
Average Age		39.76 years old	39.47 years old	39.81 years old
Average Years of Service		7.2 years	7. 6 years	7.86 years
Education	Ph.D.	3.88%	4.07%	4.24%
	Masters	18.23%	17.63%	17.92%
	Bachelor's Degree	54.11%	53.04%	53.24%
	Senior High School	13.85%	13.32%	13.65%
	Below Senior High School	9.94%	4.07%	10.96%

4.4 Information on environmental protection expenditure

Loss from pollution to the environment (including the compensation) and penalty in the most recent year to the date this report was printed, explain the policy in response in the future (including corrective action plan) and possible expenses (including the estimated amount of possible loss, penalty and compensation due to the failure of the remedy. If estimation could not be reasonably estimated, explain with

evidence):

4.4.1 Loss from pollution to the environment in the most recent year to the date this report was printed:

None.

4.4.2 Remedy and possible spending in the future:

Intensify the matching between the environmental protection permission documents and the practice of environmental protection on shop floor, and implement the proper change in the management program for facilitating audits.

E Ink treasures issues pertinent to environmental protection. Further to the effort in anti-pollution, the Company also duly observes domestic laws governing the standard of emissions, retains qualified waste disposal and treatment plant for handling wastes, assures the proper classification of wastes, and upgrades the recycling rate of resourceful wastes. The Company also follows the environmental protection files in setting up facilities for the treatment of air and water pollutants in conformity to the emission standards governed by applicable laws in Taiwan. There is no other expense further to the aforementioned expenses incurred from the maintenance and operation of the environmental protection facilities.

4.5 Labor Relations

4.5.1 Employee welfare and benefits, training, development, retirement scheme and its implementation, labor-management agreements, and protection of employee rights:

1. Employee welfare and benefits
   (1) Employee benefits are managed by the Employee Welfare Committee. Social events are organized on a regular basis to help employees recover from the stress of work.
   (2) In addition to labor insurance, E-Ink employees also receive additional layers of protection through group life, accident, medical and cancer-prevention insurance, national health insurance and regular health exams.
   (3) The Company budgets for employee education and training every year to help employees improve their management and professional skills as well as provide employees with a personalized career development plan.
   (4) To build a people-centric management system, management rules are revised when necessary based on labor standards and changes in the business environment.
   (5) Reasonable compensation and incentives are provided to recruit competitive workers.
   (6) Clear career paths are provided for outstanding personnel.
   (7) Regular labor-management meetings are convened for employee communication.

2. Employee education and training

   E Ink regards employees as its most valuable assets, emphasizing talent cultivation and training. Through various educational programs, we aim to meet the learning needs of our colleagues, providing comprehensive educational resources and fostering a conducive learning environment. This approach enables our employees to enhance their professional skills through continuous education and training, thereby elevating overall human capital quality.

   E Ink utilizes the global online learning platform "E Ink University," which constructs talent learning maps across various domains. We have initiated specialized training programs categorized into the following five major types:

   (1) Onboarding Course: Provides essential knowledge for new employees during their first three months of employment, including company overview, corporate image, products and principles, personnel regulations, employee benefits, integrity management code, and workplace safety training.
   (2) General Courses: In 2024, we continue promoting a "Culture of Accountability" and, in response to emerging trends, offer training on topics such as cybersecurity, AI, intellectual property, and sustainable development, aimed at enhancing employees' professional literacy and competitiveness.
   (3) Professional Courses: Focuses on deepening talent development and cultivating comprehensive key talent to strengthen organizational competitiveness. Knowledge management is facilitated through the online learning platform, combined with specialized training organized by departments, to establish E Ink's professional competency map, promoting experience sharing and fostering a continuous learning environment.
   (4) Management Courses: Tailored to meet the needs of functional development, these courses are

designed to address leadership skill gaps. Topics include: master forums, presentation skills, conflict management, delegation, coaching techniques, building successful teams, clarifying performance expectations, and job coaching.

(5) Production Line Training: Assists in establishing L1 to L3 certification mechanisms for production lines, providing the necessary knowledge and inspection systems for technical staff to obtain machine operation permits, ensuring product quality.

3. Employee Code of Conduct or Ethics

   E Ink has always embraced a philosophy of "people-oriented". In addition to respecting our employees for their expertise, we also provide them with a stage where they can truly contribute their talents. E Ink places more emphasis on employees' integrity and ethics. HR therefore provide new employees with the relevant company rules while joining and ask them to comply with.

4. Employee safety and health

   The "safety" and "health" of employees have always been key concerns for E Ink. We've not only received international certification on ISO 45001 Professional Safety and Health Management System but also received international certification on the ISO 14001 Environmental Management System. For employee health management, employee health exams are conducted on a regular basis as required by law. Coverage of the health exams exceeds mandatory protections for worker health.

4.5.2 Retirement scheme and its implementation.

The company has established an employee retirement and pension plan in accordance with the Labor Standards Act and the Labor Pension Act, which regulates the allocation and management of employee retirement reserves. According to the plan, the contribution rate for the old system is 4% of the employee's total salary, while the new system is 6%. Additionally, the plan also outlines detailed retirement conditions and the method for calculating pensions.

(1) **Old and New Pension Contribution Rates:**

- The contribution rate for the old system is 4% of the employee's total salary.
- The contribution rate for the new system is 6% of the employee's total salary.

(2) **Contribution and Storage Method:**

- The company makes monthly contributions to the labor retirement reserve, which is stored in a designated account at Bank of Taiwan. The balance of the labor retirement reserve account is disclosed regularly. Under the new system, contributions are made monthly to the employee's individual account in the labor insurance system to ensure their retirement benefits.

(3) **Retirement Application Process and Conditions:**

- Employees may submit a retirement application according to the regulations. The specific application process and conditions will be detailed in the company's internal manual and made available for reference on the company's website. The method for calculating pensions will depend on the chosen contribution plan and factors such as the employee's retirement age.

(4) **Committee Oversight and Management:**

- The company has established the "Labor Retirement Reserve Oversight and Management Committee" to oversee and manage the pension application process. The committee meets quarterly to ensure that pension contributions and management comply with regulations and regularly audits the implementation of related policies.

4.5.3 Labor-Management Disputes:

The company's measures and policies on labor relations are implemented in accordance with relevant laws and regulations. We have established various communication mechanisms to meet different needs, aiming to establish a good labor-management interaction. These mechanisms include labor-management meetings, employee meetings, suggestion boxes, an appeal mailbox (appeal@eink.com), and an appeal hotline (03-5643200#11199). The goal is to create a culture of unimpeded communication and effectively resolve labor disputes.

4.5.4 Estimation of current and potential future losses suffered by the company due to labor-management disputes in the last two years and up to the publication of this report, and the measures taken in response: None.

4.6 Cybersecurity Management

4.6.1 Cybersecurity risk management framework:

Information security matters of the company are currently managed by the Information Security Department of the IT Division. This includes planning internal information security systems, establishing information security standards, promoting information security policies, enhancing employee awareness of information security, implementing information security protection and controlling systems, and executing and enforcing information security operations. Adjustments are made as needed based on the current environment and timely requirements.

In response to information security risks, E Ink established a dedicated Information Security Department in 2022 – the Information Security Department and the Emergency Response Team. To comprehensively enhance information security management and protection capabilities, the Hsinchu and Linkou plants in Taiwan implemented the ISO/IEC 27001 Information Security Management System (ISMS) in 2022.

Additionally, an "Information Security Management Committee" was established, chaired by the Chairman of the Board, with senior managers from various centers serving as committee members.
Additionally, an information security management unit was established, led by the Deputy Manager of the IT Department serving as the Chief Information Security Officer (CISO). This team is specifically charged with promoting ISMS-related procedures, plans, or activities, operating on the PDCA (Plan-Do-Check-Act) cycle in order to establish, implement, maintain, and improve the information security management system. Furthermore, the performance of the ISMS initiatives will be regularly reported to the Information Security Management Committee, which in turn reports annually to the Board of Directors on the effectiveness of information security management and the strategic direction of information security, with periodic reviews and adjustments. The company is also responding to the update of the information security management standard and will complete the ISO/IEC 27001:2022 certification update by the end of 2024.

Information Security Management Committee Organization

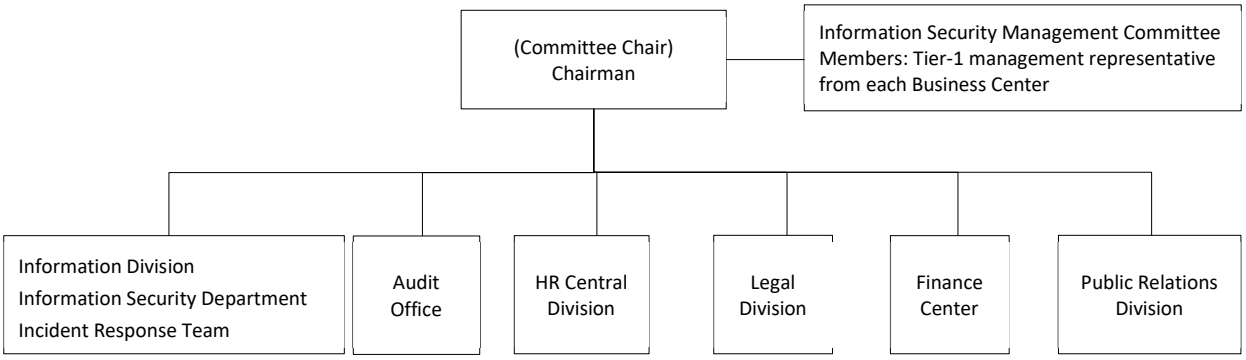

Department/Organization	Members	Description of Functions
Information Security Management Committee -Committee member	Committee Chair: Chairman Members: President, CFO, Operation Center Vice President, Product Center Vice President	• Determine the content and strategic direction of corporate information security governance
Information Division Information Security Department.	Chief Cybersecurity Officer: IT Division Associate Vice President Head of Information Security Department:	• Planning and monitoring of cybersecurity approaches, and implementation of cybersecurity management • Assessment of system and information technology control solutions • Cybersecurity incident response and handling • External audit

Department/Organization	Members	Description of Functions
Information Division. Emergency Response Team	Manufacturing Systems Department, ERP Systems Department, Application Systems Department, Infrastructure Systems Department	• Operation, maintenance, and management of information systems, and assisting with response to abnormal events
Audit Office	Audit Office Director	• Audit of the implementation effectiveness of information security policies
HR Central Division	HR Central Division Deputy Director	• Organizing of education, training and awareness • HR guidance and disciplinary action for cybersecurity principles violation
Legal Division	Legal Division Director	• Consultation on legal issues in relation to personal privacy • Interpretation of laws and regulations
Finance Center	Finance Center Senior Director	• Announcement of material information relating to major cybersecurity incidents
Public Relations Division	Public Relations Division Senior Director	• External press release relating to major cybersecurity incidents

4.6.2 Cybersecurity policies

(1) Cybersecurity goal

The purpose of cybersecurity is to maintain the high availability of corporate information systems, to secure of the information environment, to protect the company's business secrets, to prevent unauthorized usage, compromising, tampering or damage of corporate information systems and data. By maintaining our competitive advantages, the Company will secure the trust of our customers and engage in sustainable development.

(2) Scope of cybersecurity

To demonstrate the senior management's commitment to cybersecurity governance, the Information Security Department has developed an information security governance blueprint. This blueprint originates from cybersecurity strategic objectives and unfolds a governance framework, implementing information security technology and management practices through the international standard NIST framework.

1. Group information security objective: Reduction of cybersecurity risks to ensure business continuity
2. Information Security governance framework:
   - 2.1 Information Security Management System: ISO/IEC 27001:2022
   - 2.2 Information Security Organization: Information Security Management Committee, Dedicated Information Security Unit, Incident Response Team
   - 2.3 Information Security Processes: Information Asset Management, Cybersecurity Incident Reporting Mechanism, Incident Response Drills
   - 2.4 Information Security Awareness: Cybersecurity Promotion, Cybersecurity Courses, Specialized Personnel Security Certifications, Social Engineering Drills

4.6.3 Concrete management programs, and investments in resources for cybersecurity management

Category	Item	Concrete management measures
Information Security Governance	Information security management system	The ISO/IEC 27001:2022 certification transition was conducted in 2024, and the recommendation for re-assessment was successfully passed by the end of December 2024, ensuring the continued validity of the certification.
	Information Security Management Committee	Annually discuss and decide on the company's information security management policies and implementation objectives.
		Hold regular annual meetings of the Information Security Committee to discuss and report on the effectiveness of information security governance.
	Dedicated Information Security unit	Planning of information security systems
		Formulation of information security standards
		Promotion of information security policies
		Enhancement of employee information security awareness

Category	Item	Concrete management measures
		Implementation of information security protection and management systems, and execution of information security operations.
	Incident Response Team	Respond to and deal with cybersecurity incidents promptly.
	Information asset management	Systematic information asset management framework and policies.
	cybersecurity Incident reporting mechanism	Establish a reporting mechanism and process for cybersecurity incidents across all group locations and units, enabling effective and rapid response and handling when security incidents occur.
	Cybersecurity incident response drill mechanism	In compliance with the requirements of the Information Security Management System, annual drills for information security incidents are regularly scheduled.
	Cybersecurity awareness campaign	Annually conduct information security announcements and educational training courses on an irregular basis.
	Cybersecurity course	Personnel from the dedicated cybersecurity unit attend external training courses
	Cybersecurity certification	Personnel from the cybersecurity department undergo cybersecurity certification courses. Current certifications include CEH, ISO/IEC 27001:2013 LAC、ISO/IEC 27001:2022 LAC、ISO 22301:2019 LAC and more are being progressively added.
	Social engineering exercise	Social engineering exercises are regularly held each year to strengthen employee cybersecurity awareness
	Personnel management system	Employee authority, responsibility and prohibited behaviors are clearly defined in company regulations.
		Orientation training for new employees includes training on cybersecurity and confidentiality awareness.
		The duty of employees on the maintenance of cybersecurity and confidentiality are explicitly stated in their contract.
		Announcements are issued on an ad hoc basis to remind employees on the importance of working together to maintain cybersecurity.
		The consequences for illegal use of computer accounts and e-mail are spelled out to employees.
Information Security System Management	Emergency incident response	Well-established management practices are in place, enabling employees to know how to report and respond to information system anomalies or significant cybersecurity incidents.
	Physical environment management	Adhere to regulatory standards to maintain a safe and operational environment for the computer and data center.
		Establish comprehensive monitoring mechanisms and maintain proper daily operational procedures to create a secure and reliable information center.
	Information system redundancy, verification, and restoration	1. Introduction of a suitable backup system and monitoring mechanism with regular backups and reports on all information systems.
		2. Established a sound disaster recovery exercise and data verification mechanism to ensure the integrity of backup data and operator familiarity.
		3. Established off-site backup system for critical information systems such as SAPERP and critical databases.
	IT end-user device controls	Establish clear rules and security control mechanisms for the use of information terminal equipment within the company:
		Ensure employees are clearly informed of the company's regulations, limitations, and prohibitions regarding the use of both business and personal information devices.
		Select reliable antivirus software and enable automatic virus signature updates to reduce the risk of virus infections and malicious attacks.
		Implement a terminal device management system to effectively control external devices and network or cloud services, minimizing the risk of confidential company data leaking to personal devices.
		Regularly perform system and application software patching and version updates to address vulnerabilities.
	Network Security Controls	Introduction of an endpoint cybersecurity control system to effectively block intranet access over the wired network for non-company IT devices.

Category	Item	Concrete management measures
		Introduction of a wireless network cybersecurity management system to effectively block intranet access over wireless networks for non-company IT devices.
		Establishment of a joint defensive network of group firewalls to effectively block malicious attacks from external networks.
		Devised network access control policies with strict management rules and approval procedures for intranet-to-extranet access, extranet-to-intranet access, and customer/supplier data exchange management.
		Firewalls and strict management mechanisms were also implemented for different types of internal domains to enforce effective domain partitioning and management. The connection and access policies for each domain were also tailored to their specific operating requirements and cybersecurity considerations.
	Mail Security Control	An email protection system with advanced functions such as external trust rating and sandbox prediction was adopted to strengthen the Group's ability to filter and protect against new types of business fraud, phishing attacks with multi-layered URLs, and a wide variety of malicious email attachments.
	External Exposure Monitoring, Analysis and Vulnerability Scanning	External exposure assessment and vulnerability scanning and patching mechanisms were established for high-risk Internet services provided by the group through eink.com to reduce the risk of malicious intrusion and attack.

4.6.4 List any losses suffered by the company in the most recent fiscal year and up to the annual report publication date due to significant cyber security incidents, the possible impacts therefrom, and measures being or to be taken. If a reasonable estimate cannot be made, an explanation of the facts of why it cannot be made shall be provided: None.

4.7 Important Contracts

Nature of contract	Counterparty	Contract start and end dates	Main details	Restrictive clauses
Reciprocal patent licensing	Company F	Confidentiality clause that prohibits public disclosure	Reciprocal patent licensing	As specified in the reciprocal patent licensing agreement
Land lease	Hsinchu Science Park Administration	2014/7/1~ 2033/12/31	Lease of plant land	Unless agreed by the Science Park Administration, the Company shall not sublet or in any way allow others to use part or all of the leased land, or use the land for non-agreed or illegal purposes.
Reciprocal patent licensing	Company G	Confidentiality clause that prohibits public disclosure	Reciprocal patent licensing	As specified in the reciprocal patent licensing agreement
Long term loan contract	Made jointly by Mega International Commercial Bank with 7 participating banks.	2020/12/15~ 2025/12/14	5-year syndicated loan contract with a limit of NT$ 6.8 billion	None

Nature of contract	Counterparty	Contract start and end dates	Main details	Restrictive clauses
Long term loan contract	Crédit Agricole Corporate and Investment Bank (Managing Bank) and two other banks	2024/09/11~ 2027/09/11	On September 11, 2024, the company signed a green loan agreement with a syndicate of banks for a total amount of NT$3,000,000 thousand, with the loan amount available for 3 years from the first drawdown.	None
Long term loan contract	Mega International Commercial Bank (Managing Bank) and sixteen other banks and bill finance companies	2024/11/08~ 2029/11/08	On November 8, 2024, the company signed a syndicated credit agreement with a syndicate of banks for a total amount of NT$12,000,000 thousand, with the loan amount available for 5 years from the first drawdown.	None

V. Review of Financial Conditions, Financial Performance, and Risk Management

5.1 Analysis of Financial Status

Unit: NT$ thousands

Item \ Year	Dec. 31th, 2024	Dec. 31th, 2023	Difference	
			Amount	%
Current assets	33,903,543	26,515,690	7,387,853	27.86
Property, plant and equipment	11,176,505	9,149,833	2,026,672	22.15
Intangible assets	7,984,994	7,607,457	377,537	4.96
Other non-current assets	38,086,702	31,183,253	6,903,449	22.14
Total assets	91,151,744	74,456,233	16,695,511	22.42
Current liabilities	22,858,406	17,033,843	5,824,563	34.19
Non-current liabilities	10,551,507	7,873,918	2,677,589	34.01
Total liabilities	33,409,913	24,907,761	8,502,152	34.13
Share capital	11,611,227	11,498,174	113,053	0.98
Capital surplus	10,970,780	10,878,525	92,255	0.85
Retained earnings	24,736,387	20,696,630	4,039,757	19.52
Other equity	9,734,096	5,834,492	3,899,604	66.84
Total equity attributable to owners of the Company	57,052,490	48,907,821	8,144,669	16.65
Non-controlling interests	689,341	640,651	48,690	7.60
Total equity	57,741,831	49,548,472	8,193,359	16.54

Main reasons and their impacts for significant changes in assets, liabilities, and shareholders' equity over the past two years:

(1) The increase in current assets was primarily attributable to operating cash inflows and investments in financial instruments and time deposits. In addition, the growth in revenue led to an increase in accounts receivable.

(2) The increase in property, plant and equipment was mainly due to the expansion of plant facilities and production lines.

(3) The increase in non-current assets is primarily due to the increase in investments in financial products, equity instruments, and unrealized gains from valuations.

(4) The increase in current liabilities is mainly due to supporting operational growth, with corresponding increases in accounts payable, short-term borrowings, and payable salaries and bonuses.

(5) The increase in other non-current liabilities was primarily due to an increase in long-term borrowings.

(6) The increase in other equity was mainly due to unrealized gains arising from fluctuations in the market value of equity instrument investments.

5.2 Analysis of Operation Results

1. Financial Analysis

Unit: NT$ thousands

Item \ Year	2024	2023	Difference	
			Amount	%
Operating revenue	32,163,133	27,119,755	5,043,378	18.60
Operating costs	16,198,461	12,663,275	3,535,186	27.92
Gross profit	15,964,672	14,456,480	1,508,192	10.43
Operating expenses	8,345,888	7,171,003	1,174,885	16.38
Income from operations	7,618,784	7,285,477	333,307	4.57
Non-operating income and expenses	3,260,155	2,538,831	721,324	28.41
Income before income tax	10,878,939	9,824,308	1,054,631	10.73
Income tax expense	(1,956,476)	(1,958,082)	1,606	(0.08)
Net income for the year	8,922,463	7,866,226	1,056,237	13.43

Analysis and explanation of the main reasons for significant changes in operating revenue, operating profit, and pre-tax profit over the past two years:

(1) Operating revenue and operating costs increased due to the transition between existing and new products, as well as the launch of new products by the Company.

(2) Non-operating income and expenses increased primarily due to higher net foreign exchange gains.

2. Expected sales volume and its considerations

The company establishes annual sales targets and determines the expected sales quantity based on the overall industry environment, market supply and demand conditions, and past business performance.

3. Anticipated impact on the company's future financial operations and response plans

The Company formulates its operational and financial plans based on sales and operational targets. However, the achievement of these plans may be affected by factors such as the industry environment, market supply and demand, and the Company's operational performance. Each department within the Company is responsible for monitoring and controlling progress toward the established targets and will develop response plans to address actual or potential factors that may impact the achievement of these goals.

In addition, to support the Company's business growth, product portfolios are adjusted in response to changes in market demand. The Company remains committed to product optimization and innovation in order to maintain technological leadership and product competitiveness, thereby aiming to expand market share and enhance profitability.

5.3 Analysis of Cash Flow

1. Analysis of the changes in cash flows in the most recent year

Unit: NT$ thousands

Cash balance at the beginning of period ①	Cash flows from operating activities of the period ②	Cash flows from investing activities of the period ③	Cash flows from financing activities of the period ④	The influence of changes in the exchange rate on cash and cash equivalents ⑤	Amount of cash surplus (short) ①+②+③+④+⑤	Remedy for cash short	
						Investment plan	Financing plan
9,687,937	7,106,156	(3,260,446)	(353,733)	26,255	13,206,169	N/A	N/A

1. Analysis of the changes in cash flows in the most recent year:
(1) Operating Activities: Net cash inflow from operating activities was primarily due to an increase in cash inflows generated from operations.
(2) Investing Activities: Net cash outflow from investing activities was mainly attributable to capital expenditures and investments in financial instruments.
(3) Financing Activities: Net cash outflow from financing activities was primarily due to the net effect of increased borrowings and the distribution of cash dividends.
2. Remedial measures for cash shortages and plans to improve liquidity: N/A.

2. Cash Flow Analysis for the Coming Year

The company expects that the cash on hand and net cash inflows from operating activities in 2025 will be sufficient to cover various cash outflows, including repayment of bank loans and the payment of cash dividends. As a result, the company anticipates good cash liquidity in the future.

5.4 Impact of major capital expenditures in recent years

Unit: NT$ thousands

Project	Actual or Planned Source of Capital	Total Capital	Actual or Expected Capital Expenditure	
			2024	2023
Plant, equipment and other	Equity fund	5,328,418	2,885,629	2,442,789

Expected potential benefits: The aforementioned capital expenditures are in response to the company's business development and serve various purposes such as expanding production capacity, improving production efficiency, and developing new technologies.

5.5 Investment Policy in the Last Year, Main Causes for Profits or Losses, Improvement Plans and Investment Plans for the Coming Year

5.5.1 Investment Policy in the Last Year

1. Investments were made in related upstream and downstream ePaper industries to complement the long-term development of the Company. These aimed to lower production costs and increase production capacity.
2. The main consideration during investment was business development and overseas growth strategy. Financial returns and risks served as the basis for investment strategy.

5.5.2 Profit and loss analysis for invested businesses

In 2024, the profit from investments in subsidiaries amounted to NT$3,961,186 thousand, representing a decrease of NT$671,196 thousand compared to 2023, primarily due to a decline in revenue and profitability of subsidiaries.

5.5.3 Improvement Plans & Investment Plans for the Coming Year

The company's investment in the investment businesses is guided by long-term strategic objectives. It continues to focus on developing new types of EPD and related applications within the upstream and downstream ecosystem. The goal is to expand the market presence in the EPD industry while considering financial risks and investment returns. A cautious evaluation is undertaken to maximize the value created by the company.

5.6 Risks of the most recent year and as of the printing date of this annual report

5.6.1 The influence of interest rate, exchange rate fluctuation, inflation on the income position of the Company, and the responses in the future:

1. Interest rate:

   As of the publication date in 2025, the Company and its subsidiaries adhere to a prudent and stable approach to capital allocation, primarily placing funds in USD bank deposits and highly liquid short-term repurchase agreements to ensure capital security and maintain liquidity. The Company will adjust the allocation ratio as needed to optimize capital utilization.

2. Exchange rate:

   The Company's foreign exchange assets and liabilities are primarily denominated in USD. In 2024, the appreciation of the USD against Asian currencies resulted in exchange gains by year-end. As of the publication date in 2025, the USD has continued to appreciate against Asian currencies. The Company will implement appropriate hedging strategies to mitigate the impact of exchange rate fluctuations.

   Future Measures: The Company adheres to a prudent foreign exchange strategy, dynamically adjusting its foreign exchange asset and liability positions while utilizing hedging instruments to manage the impact of exchange rate fluctuations on overall operations.

3. Inflation:

   Most countries worldwide continue to adopt relatively loose monetary policies, raising concerns about future inflation. However, in the short term, inflation has a minimal impact on the Company's profitability.

5.6.2 Undertaking of high risk and high leverage investment, the policies of loaning of funds to a third party, and endorsement/guarantee, the main reason for profit or loss, and the response in the future:

The Company was not engaged in high risk and high leverage investment. In general, the Company does not finance a third party or undertake endorsement/guarantee in favor of a third party except to subsidiaries under the control of the Company or for business reasons. Loaning of funds and endorsement/guarantee shall be subject to review and evaluation in accordance with the “Procedure for Loaning of Funds and Endorsement/Guarantee” in processing. The Company engaged in derivative trade for hedge only and will proceed with the policies and measurement under the “Procedure for the Acquisition or Disposition of Assets” of the Company.

5.6.3 R&D Plan in the future and the projection of expenses for R&D:

In the coming five years, the company will continue its current research and development direction, focusing on the technological advancements of ePaper displays. Research will be conducted in areas such as large size, colorization, lightweight design, touch functionality, writability, and flexibility. Process technology will also be explored in terms of integration and functional enhancement. Attention will be given to the development of TFT-related materials to improve overall product quality and production yield. Additionally, the company will continue to invest in the development of other display-related technologies. The goal is to combine different advantages in display technologies to meet the unique product demands of niche customers, ensuring sustainable development in the competitive display industry.

Expanding the applications of ePaper beyond eReader and exploring other areas within the display field is an important focus for the company's research team. Currently, the ePaper technology has made significant progress in the field of electronic labels. The research team will align with market demands and launch relevant products to adapt to the rapid development of electronic labeling. Other applications in areas such as eNote systems, IoT devices, smart cards, dual-screen phones, and signage displays are also actively pursued. The total research expenditure for the above-mentioned projects in the next year is estimated to be around 10% to 15% of the revenue proportion.

5.6.4 The influence of the changes in major policies of the home governments and foreign governments, and the regulatory environment, on the financial position and operation of the Company, and the

response:

The Company pays close attention to any change in policies and regulatory environment that may affect the operation of the Company and makes corresponding adjustment to its related internal system.

5.6.5 The impact of technological and industrial change on the financial position and operation of the Company, and the response:

The company continuously monitors technological developments in the display industry and engages in evaluation and research and development. To date, technological changes and industry shifts have not had a significant impact on the company's financial operations.

5.6.6 The influence of the change in corporate image on corporate crisis management, and the response:

The core value of an enterprise is corporate image and reputation. The buildup of an image and accumulation of reputation was rested with the cornerstone of rapid and effective communication and sincerity. It is not only the responsibility of the enterprise but also the responsibility of all of the enterprise for the effective and efficient response to crisis of the enterprise and minimization of the damage. The officers of the Company are well aware of crisis management and amplify the effect of dissemination so that related agencies or the investors could keep abreast of the dynamic situation of the Company. The long-term support and trust of the investors will be an input to the sustainable development of the enterprise for yielding positive result.

5.6.7 The expected result of merger and acquisition and possible risk, and the response: None.

5.6.8 The expected result from capacity expansion and possible risk:

In response to market and operational demands, the Company has carefully evaluated and promoted investment plans for expanding factories and increasing production capacity, which have been approved by the board for each plant's production expansion. The expected benefits include increased capacity, meeting market demand, and strengthening competitiveness. After thorough evaluation, all risks have been effectively managed, and the risks are controllable, ensuring no adverse impact on the smooth execution of the plan.

5.6.9 The risks of over concentration of sale and purchase, and the response:

The Company has pursued a diversification policy for avoiding the risk deriving from over concentration in purchase and sale.

5.6.10 The influence and risk from the massive transfer of equity shares or swap by the Directors, Supervisors, or shareholders holding more than 10% of the shares issued by the Company, and the response: None.

5.6.11 The influence and risk from change hand in ownership, and the response: None.

5.6.12 Legal actions or non-contentious matters shall be assured to include major legal actions, non-contentious matters or administrative appeals already trialed with sentence or in proceeding as stated in the financial statements covering the most recent year: None.

5.6.13 Other important risks, and mitigation measures being or to be taken:

Assessment for information security risks and Response measures:

1. <u>Assessment for information security risks</u>
   - 1.1 Continuously monitor internal and external information security risks.
   - 1.2 Effectively identify threat sources and analyze the potential and impact of exposure to the organization.
   - 1.3 Report risks identified in the risk assessment to the Information Security Committee for discussion and decision-making.
   - 1.4 Enhance the organization's internal and external cybersecurity risk detection and defense capabilities.
2. <u>Response measures for information security risks</u>
   - 2.1 **Information System Risk Prevention and Operations Management:**

(1) Server hardware is designed with hardware redundancy mechanisms to prevent service interruptions due to single hardware system failures.

(2) Information systems are equipped with round-the-clock monitoring and alert mechanisms to notify system administrators immediately in case of anomalies for swift troubleshooting.

(3) Information systems feature automated scheduling and offsite data replication backup mechanisms.

(4) Primary information systems and databases have remote backup servers.

2.2 **Emergency Response and Crisis Management:**

In response to system anomalies, rigorous procedures are established, and annual disaster recovery drills are conducted for main systems to ensure orderly and calm crisis management. Reviews and records are made post-event or drill for continuous improvement and reduced disaster recovery times.

2.3 **Front-End Information Device Operations Management and Security Control:**

(1) Wired networks are secured with endpoint security controls to prevent unauthorized devices from accessing internal information systems.

(2) Wireless networks have strict device and identity verification mechanisms to block unauthorized access.

(3) Endpoint computer devices are controlled rigorously through encryption, regulated USB ports, software installations, and access to network shares or cloud storage.

(4) Smart mobile devices are managed under essential security controls to fulfill the requirements of mobile working while ensuring necessary information security.

(5) Internet access is managed with behavior monitoring and antivirus mechanisms, with categorized control over accessible websites, despite the system's obsolescence and vulnerability to evolving web services, computer viruses, phishing, hacking, and fraud.

(6) An email protection system is in place to filter out various types of computer viruses, phishing, hacking, and fraud conducted via email.

(7) Beyond these systems, the IT unit also conducts educational campaigns to heighten staff awareness and promote correct usage practices to mitigate the risk of security incidents.

2.4 **External Exposure Monitoring and Vulnerability Detection:**

Mechanisms for external exposure analysis and vulnerability detection are established to address high-risk information services exposed to external threats. This framework is designed to reduce the risks of malicious external intrusions and attacks.

2.5 **Conduct annual penetration testing on external system services to ensure the security and safety of their use.**

VI. Special Disclosure

6.1 Summary of Affiliated Companies

6.1.1 Summary of Affiliated Companies

https://mopsov.twse.com.tw/mops/web/t57sb01_q10

6.1.2 Basic Information of Affiliated Companies

https://mopsov.twse.com.tw/mops/web/t57sb01_q10

6.1.3 Shareholder information of affiliates to which the Company exercise control: None.

6.1.4 Industries covered by business of all affiliated companies

https://mopsov.twse.com.tw/mops/web/t57sb01_q10

6.1.5 Directors, statutory auditor(s) and President of each affiliated companies

https://mopsov.twse.com.tw/mops/web/t57sb01_q10

6.1.6 Operation Overview of Affiliated Companies

https://mopsov.twse.com.tw/mops/web/t57sb01_q10

6.1.7 Affiliated Parties Consolidated Financial Statements: Not Applicable.

6.1.8 Affiliated Parties Report: Not Applicable.

6.2 The offering of securities through private placement in the most recent year to the date this report was printed: None.

6.3 Additional Information: None.

6.4 Incidents that caused significant influence on the shareholders' equity or stock price of the Company as stated in Subparagraph3, Paragraph 2 in Article 36 of this law in the most recent year to the date this report was printed: None.

6.5 Major resolutions of the Shareholders Meeting and Board in the most recent year to the date this report was printed.

1. Major resolutions passed in shareholder meetings and the execution progress

The Company's 2024 Annual Shareholders' Meeting was held on May 29, 2024, at the Company's conference room on the first floor (No. 3, Lixing 1st Road, Hsinchu Science Park). The resolutions passed by the shareholders and their implementation status are as follows:

Acknowledgments, Discussions, and Election	Current Progress
(1) The Company's 2023 financial statements.	Approved.
(2) The Company's 2023 profit distribution proposal.	Approved. The Company completed the cash dividend distribution on August 22, 2024.

2. Important resolutions of the board of directors

The company convened 6 board meetings during 2024 up until the publication date, with key resolutions summarized as follows:

Board Meeting Date	Session	Motion
2024.02.23	The 5th Meeting of the 12th Board of Directors	1. Report on the Minutes and Implementation Status of the Fourth Meeting of the Twelfth Board of Directors
		2. Report on the Minutes of the Fourth Meeting of the Fourth Audit Committee
		3. Report on the Minutes of the Third Meeting of the Fifth Compensation Committee
		4. Report on the 2023 Business Report and Financial Statements
		5. Report on the First Quarter Business Situation for 2024
		6. Report on Derivative Financial Instrument Transactions of the Company and Its Subsidiaries for December 2023 and January 2024
		7. Report on the Status of Funds Lent and Guaranteed by the Company and Its Subsidiaries as of January 31, 2024
		8. Report on the Implementation of the Audit Plan for October to December 2023
		9. Report on the Performance Evaluation Results for the Board of Directors, Directors, and Various Functional Committees for 2023
		10. Report on Indirect Investments in Mainland China through Third-Party Investment Ventures
		11. Preparation of the Financial Statements for 2023
		12. Proposal for Profit Distribution for 2023
		13. Proposal for Employee Compensation Amounts and Director Compensation Amounts from Profit Distribution, as well as Payment Methods and Recipients for 2023
		14. Proposal to Adjust Transportation Expenses (Travel Allowances) for Directors Attending Relevant Meetings Starting from 2024
		15. Proposal for Performance Targets and Related Employee Stock Option Plan (ESOP) Distribution Ratios for 2022
		16. Proposal to Set the Base Date for Issuing New Shares through Employee Stock Options (ESOP) Conversion for Q4 of 2023
		17. Proposal for the Company's Internal Control System Declaration for 2023
		18. Proposal for Loan Application Limits with Various Banks
		19. Proposal for Regular Assessment of Independence and Competence in Appointing Certified Public Accountants
		20. Proposal to Amend Certain Provisions of the Company's Board Meeting Rules
		21. Proposal to Amend Certain Provisions of the Company's Audit Committee Organizational Regulations
		22. Proposal for Scheduling Time, Location, and Agenda for the Annual Shareholders' Meeting in 2024
2024.05.10	The 6th Meeting	1. Report on the Fifth Meeting of the Twelfth Board of Directors and Its Implementation Status
		2. Report on the Fifth Meeting of the Fourth Audit Committee

Board Meeting Date	Session	Motion
	of the 12th Board of Directors	3. Report on the Fourth Meeting of the Fifth Compensation Committee
		4. Report on the First Quarter Business Situation and Consolidated Financial Statements for the 2024 Fiscal Year
		5. Report on the Second Quarter Business Situation for the 2024 Fiscal Year
		6. Report on Derivative Financial Instrument Transactions of the Company and Its Subsidiaries from February to April of the 2024 Fiscal Year
		7. Report on the Status of Funds Lent and Guaranteed by the Company and Its Subsidiaries as of April 30 of the 2024 Fiscal Year
		8. Report on the Implementation of the Audit Plan for the First Quarter of the 2024 Fiscal Year
		9. Report on the Sustainable Development Framework, Strategic Planning, Related Goals, Indicators, and Achievement Status, Greenhouse Gas Inventory and Verification Results of the Company and Its Subsidiaries, as Well as Stakeholder Communication and Response Results
		10. Report on the Operation and Execution Results of the Company's Risk Management Policies and Procedures
		11. Report on the Company's Sustainable Product Management Policy
		12. Proposal for the First Quarter Business Situation and Consolidated Financial Statements for the 2024 Fiscal Year
		13. Proposal to Approve the Company's 2023 Corporate Sustainability Report
		14. Proposal for the Annual Compensation Adjustment of the Company's Chairman
		15. Proposal for the Salary Adjustment of Employees and Managers (Including Assistant Managers) for the 2024 Fiscal Year
		16. Proposal to Set the Base Date for the Conversion and Issuance of New Shares for Employee Stock Options in the First Quarter of the 2024 Fiscal Year
		17. Proposal for the Company's Loan Application with Banks
		18. Proposal for the Company to Act as a Co-signer for Loan Applications with Banks for Its Subsidiaries
		19. Proposal for the Appointment or Removal of the Company's Chief Accounting Officer
		20. Proposal for Changes in the Company's Corporate Governance Officer
2024.08.09	The 7th Meeting of the 12th Board of Directors	1. Report on the Minutes and Implementation Status of the Sixth Meeting of the Twelfth Board of Directors
		2. Report on the Minutes of the Sixth Meeting of the Fourth Audit Committee
		3. Report on the Second Quarter Business Situation and Consolidated Financial Statements for 2024
		4. Report on the Third Quarter Business Situation for 2024
		5. Report on Derivative Financial Instrument Transactions of the Company and Its Subsidiaries from May to July 2024
		6. Report on the Status of Funds Lent and Guaranteed by the Company and Its Subsidiaries as of July 31, 2024
		7. Report on the Implementation of the Audit Plan for April to June 2024
		8. Report on the Renewal Status of Directors and Officers Liability Insurance
		9. Report on the Current Management and Future Planning of Intellectual Property Rights
		10. Report on the Introduction and Implementation of ISO37001 Anti-Bribery Management System Certification for 2024
		11. Report on the Expansion of Production Line Equipment and Factory for E Ink Corporation, a 100% Owned Subsidiary in the United States
		12. Report on the New Production Equipment Construction Project at the New Hsinchu Factory
		13. Report on the New Production Equipment Construction Project at Chianchi Optoelectronics Technology (Yangzhou) Co., Ltd., a 100% Invested Subsidiary
		14. Report on the Five-Year Syndicated Loan Arrangement with Mega International Commercial Bank Co., Ltd., Bank of Taiwan, and Hwatai Commercial Bank Co., Ltd. to Repay Existing Loans and Enhance Mid-Term Operating Funds
		15. Proposal for the Second Quarter Business Situation and Consolidated Financial Statements for 2024
		16. Proposal to Set the Base Date for Issuing New Shares through Employee Stock Options (ESOP) Conversion for Q2 of 2024
		17. Proposal for Loan Application Limits with Banks
		18. Proposal for the Company to Act as a Co-signer for Loan Applications with Banks for Its Subsidiaries
		19. Proposal for the New Production Equipment Construction Project at the New Hsinchu Factory
		20. Proposal for a Five-Year Syndicated Loan Arrangement with Mega International Commercial Bank, Taiwan Cooperative Bank, and Hua Nan Commercial Bank to Repay Existing Loans and Enhance Mid-Term Operating Funds
2024.11.06	The 8th Meeting of the 12th Board of Directors	1. Report on the Minutes and Implementation Status of the Seventh Meeting of the Twelfth Board of Directors
		2. Report on the Minutes of the Seventh Meeting of the Fourth Audit Committee
		3. Report on the Minutes of the Third Meeting of the Second Sustainability Development Committee
		4. Report on the Third Quarter Business Situation and Consolidated Financial Statements for 2024
		5. Report on the Business Situation for 2024
		6. Report on Derivative Financial Instrument Transactions of the Company and Its Subsidiaries from August to September 2024
		7. Report on the Status of Funds Lent and Guaranteed by the Company and Its Subsidiaries as of September 30, 2024

Board Meeting Date	Session	Motion
		8. Report on the Implementation of the Audit Plan for July to September 2024
		9. Report on Sustainability Development Planning, Goals, Indicators, Risks, and Achievement Status
		10. Report on the Implementation of Information Security Management for 2024
		11. Report on the Construction of the Fremont Factory by E Ink Corporation, a 100% Owned Subsidiary in the United States
		12. Proposal for the Third Quarter Business Situation and Consolidated Financial Statements for 2024
		13. Proposal to Set the Base Date for Issuing New Shares through Employee Stock Options (ESOP) Conversion for Q3 of 2024
		14. Proposal for Loan Application Limits with Various Banks
		15. Proposal for Providing Funds to Yuanhan Materials Co., Ltd., a 100% Owned Subsidiary
2024.12.13	The 9th Meeting of the 12th Board of Directors	1. Report on the Minutes and Implementation Status of the Eighth Meeting of the Twelfth Board of Directors
		2. Report on the Minutes of the Eighth Meeting of the Fourth Audit Committee
		3. Report on the Minutes of the Fifth Meeting of the Fifth Compensation Committee
		4. Report on Derivative Financial Instrument Transactions of the Company and Its Subsidiaries from October to November 2024
		5. Report on the Status of Funds Lent and Guaranteed by the Company and Its Subsidiaries as of November 30, 2024
		6. Report on the Implementation of Integrity Management for 2024
		7. Report on the Operation of the ISO37001 Anti-Bribery Management System for 2024
		8. Proposal for the 2025 Operational Plan and Budget
		9. Proposal for the 2025 Audit Plan
		10. Proposal to Amend Certain Provisions of the Company's Internal Control System
		11. Proposal for the Performance Targets and Stock Incentive Plan for Managers in 2024
		12. Proposal for the Distribution of Employee Stock Options for 2023
		13. Proposal for Loan Application Limits with Various Banks
2025.02.21	The 10th Meeting of the 12th Board of Directors	1. Report on the Minutes and Implementation Status of the Ninth Meeting of the Twelfth Board of Directors
		2. Report on the Minutes of the Ninth (Special) and Tenth Meetings of the Fourth Audit Committee
		3. Report on the Minutes of the Sixth (Special) and Seventh Meetings of the Fifth Compensation Committee
		4. Report on the Business Report and Financial Statements for 2024
		5. Report on the First Quarter Business Situation for 2025
		6. Report on Derivative Financial Instrument Transactions of the Company and Its Subsidiaries for December 2024 and January 2025
		7. Report on the Status of Funds Lent and Guaranteed by the Company and Its Subsidiaries as of January 31, 2025
		8. Report on the Implementation of the Audit Plan for October to December 2024
		9. Report on the Performance Evaluation Results for the Board of Directors, Directors, and Various Functional Committees for 2024
		10. Report on Indirect Investments in Mainland China through Third-Party Investment Ventures
		11. Report on the Implementation of the International Financial Reporting Standards (IFRS) Sustainability Disclosure Standards Introduction Plan
		12. Report on the Company's Plan for Financial Investments
		13. Preparation of the Financial Statements for 2024
		14. Proposal for Profit Distribution for 2024
		15. Proposal for Employee Compensation Amounts and Director Compensation Amounts from Profit Distribution, as well as Payment Methods and Recipients for 2024
		16. Proposal to Set the Base Date for Issuing New Shares through Employee Stock Options (ESOP) Conversion for Q4 of 2024
		17. Proposal to Amend Certain Provisions of the Company's Articles of Incorporation
		18. Proposal for the Company's Internal Control System Declaration for 2024
		19. Proposal to Amend Certain Provisions of the Company's Internal Control System
		20. Proposal for Regular Assessment of Independence and Competence in Appointing Certified Public Accountants
		21. Proposal for Loan Application Limits with Various Banks
		22. Proposal to Amend the "Environmental, Health, Safety, and Energy Management Policy" (Including Environmental Safety, Health, Climate Change, Water Resources, Waste, and Energy Management Policies)
		23. Proposal for the Appointment of the Company's Internal Audit Officer
		24. Proposal for the Appointment of the Company's Chief Accounting Officer
		25. Proposal for Scheduling Time, Location, and Agenda for the Annual Shareholders' Meeting in 2025

6.6 Scope of Authority, Business Highlights during the Year, and Continuing Education for the Chief Governance Officer

1. The scope of authority of the chief governance officer

A dedicated position was established by the Company to manage all corporate governance affairs. The scope of authority includes:

(1) Organize Board meetings in accordance with the law.
(2) Production of Board meeting minutes.
(3) Assist with the appointment and continuing education for directors and independent directors.
(4) Provide directors and independent directors with the information necessary to carry out their duties.
(5) Assist directors and independent directors with compliance.
(6) Any other matters set out in the Company articles of incorporation, are those approved a resolution of the Board.

2. Business Highlights during the Year

I. Organizing of Board meetings and regulatory compliance:

(1) Planning of Board meetings, drafting of the agenda, writing of proposals, providing all participating directors and attending officers with 7 days' notice, and providing enough information for the meeting. This helps directors understand the nature of related topics before the meeting.
(2) Reminds directors in advance to recuse themselves from a proposal if a conflict of interest exists. Meeting minutes should be compiled after the meeting and delivered to each director within 20 days of each meeting.
(3) Ensure that the board meeting is convened, the content to be decided, the decision-making procedures, and the meeting minutes comply with relevant laws and corporate governance regulations.
(4) In accordance with the board performance evaluation guidelines, conduct self-evaluations for the board, board members, and functional committees. The evaluations should be completed in the first quarter of the following year, with results reported to the board. The evaluation results will be uploaded and disclosed in the annual report as required by law.
(5) As recommended by the Financial Supervisory Commission, establish sound corporate governance practices. Notify directors by email and mark reminders on their calendars, prohibiting trading of the company's stock 30 days before the release of the annual financial report or 15 days before the quarterly report. An automated system will be set up to notify directors, saving labor and preventing errors.
(6) Internal Awareness Training Sessions: In 2024, two awareness training sessions were held through the company's internal E Ink University training platform.
■Insider Trading Prevention - 2024 Annual Refresher Training (2024/07/04-2024/08/31), with a course duration of 1 hour, and 728 participants completed the training.
■ISO 37001 Anti-Bribery Management System - Overall Operational Mechanism Training (2024/08/29-2024/09/30), with a course duration of 40 minutes, and 773 participants completed the training.

II. Provide directors and independent directors information with the education they need and arrange for their continuing education.

(1) Help directors understand what laws they must comply with during the execution of their duties upon request.
(2) Assist Board members with completing at least 6 hours of continuing education each year.

3. Status of continuing education

The corporate governance officer completed 18 hours of continuing education in corporate governance-related courses in 2024. The details of the training are as follows:

Training Institution	Course Name	Training Period		Training Hours
		Start	End	
Corporate Governance Association of the Republic of China	Starting with TIPS: Discussing How Enterprises Can Build Intellectual Property Risk Prevention and Control	2024/07/26	2024/07/26	3
Corporate Governance Association of the Republic of China	Practical Compliance Work for Corporate Governance Officers	2024/08/02	2024/08/02	3
Corporate Governance Association of the Republic of China	Strategic Considerations for Group Corporate Restructuring	2024/09/06	2024/09/06	3
Corporate Governance Association of the Republic of China	Comprehensive Intellectual Property Protection Strategy – New Thinking on IP Compliance Management with AI Assistance	2024/11/15	2024/11/15	3
Corporate Governance Association of the Republic of China	An Introduction to Carbon and Energy Management from a Sustainability Perspective for Listed Companies	2024/11/22	2024/11/22	3
Corporate Governance Association of the Republic of China	Endless Business Opportunities of the Net Zero Path - Analyzing Strategic Directions from an Industry Perspective	2024/12/24	2024/12/24	3

6.7 Policies or strategies for managing environmental, social, and corporate governance risks relating to the Company's operations

Risk category		Item	Risk description	Response strategy
Strategic aspect	Changes in economic climate and geopolitical conflict	Economic environment	The overall economic environment changes have led to a downturn in the electronics industry, resulting in declining sales that have impacted the company's revenue, profitability, and financial performance.	To mitigate the business impact of changes and uncertainty in the economic environment, we will work closely with customers to track market sales and develop response strategies while also continuing to control our expenditure and lower production costs.
		Geopolitics	US-China political and economic tensions creating greater future business uncertainty. Higher tariffs for example may impact production costs and end-user demand.	Continue to monitor external changes including global regulations, politics and economic status, and make timely adjustments to our production configuration and capacity expansion plans.
	Changes in market sales	Decline in demand for application products	Inflation threatened to send the global economy into recession in 2023. The decline in the consumer electronics market weakened sales of e-readers and e-paper notebooks. It also put pressure on prices.	The economy had an impact on consumer electronic sales but demand for ESL continued to grow. Greater emphasis will therefore be placed on sales of retail applications to compensate for reduced demand in e-readers and e-paper notebooks.
		Concentration of sales	The concentration of sales in a small number of customers expose the company to changes in their demand.	We will work with our partners to expand the e-paper ecosphere, develop a greater variety of e-paper product applications, and identify more potential customers.
	Product technology R&D	Technology R&D	If the Company cannot quickly develop innovative technologies in response to technological shifts, we will gradually lose our leading advantage in the industry.	The Company will continue to invest in FLM film and materials, color, flex, and other technologies needed by the ePaper ecosystem. A strategic road map for ePaper patents will also be executed.
		Product time-to-market	The Company risks losing customers and markets if we are unable to respond quickly to market trends on product requirements.	The Company will continue to monitor market trends in technology and application requirements, shorten our product development cycle, accelerate the commercialization and technologies, and speed up mass production off the end-user market.
Business aspect	Supply chain management	Higher procurement costs	Rising costs of materials and their storage/transport will increase the cost of production.	Alternative materials will be evaluated and a multi-source supply chain system will be established to lower material and transportation costs.
		Supply disruption	Concentrated purchase gives rise to supply disruption risks; occurrences such as insufficient capacity, factory accident, or natural disaster endured by suppliers may all result in shortage of materials.	Inventory level of all types of raw materials is checked on a weekly basis to determine the optimal inventory plan. Suppliers will be carefully assessed and active efforts made to develop new suppliers.
	Green manufacturing and expansion of production capacity	Delays in construction of new plants	We are continuing to expand our production capacity based on forecasts of future market growth. The expansion plan will lead to higher operating costs, however. If we can't achieve a corresponding increase in	In response to the risk of over-expansion in production capacity, we will continue to monitor changes in market demand and work closely with customers to adjust our capacity expansion timetable as necessary.

Risk category		Item	Risk description	Response strategy
			product sales, this will have a negative effect on our business operations.	
		Green manufacturing	Non-compliance on waste disposal of discharge of pollutants will result in the Company being fined and impact our business reputation.	Reduce the discharge of pollutants by improve processing capacity for wastewater and emissions.
	Human resource development	Attracting and retaining talent	Inability to attract and retain quality talent in sufficient quantities may impact on company operations.	Continue to invest in talent cultivation, salary and benefits, and friendly workplace in order to attract and recruit quality talent.
		Talent development	If our people's skills cannot keep up with the times, then this will lead to the erosion of the Company's competitive advantage and growth.	The E Ink University was established by E Ink in 2020 to provide a variety of common training courses. Employee skills are enhanced through the enforcement of in-service training and the certification system.
Financial aspect	Financial and investment risk	Exchange rate fluctuations	Most of the Company's external transactions are in foreign currencies. Unfavorable exchange rate fluctuations will negatively impact revenue and profitability.	The Company insists on the pursuit of stable foreign exchange strategy with dynamic adjustment to the position of assets and liabilities in foreign currencies. This is combined with hedging tools to limit the impact of exchange rate fluctuations on our overall operations.
		Under-performance of new businesses	Our investments in new businesses may not perform as well as anticipated due to economic changes, or problems with technology and production quality.	The Company is continuing to monitor changes in market demand and technological developments. An international assessment process ensures the timely adjustment of investment strategy for optimal return.

6.8 Continuing education of directors during the fiscal year

Title	Name	Training Start	Training End	Organizer	Course Title	Hours	Total Annual Hours
Representative of Institutional Director	Johnson Lee	2024/12/02	2024/12/02	Chinese Corporate Governance Association	AI and the Industrial Revolution: Generative AI Systems Based on iFA Architecture	3	6
		2024/02/21	2024/02/21	Taiwan Securities and Futures Institute	Corporate Governance and Securities Regulations	3	
Representative of Institutional Director	FY Gan	2024/12/02	2024/12/02	Chinese Corporate Governance Association	AI and the Industrial Revolution: Generative AI Systems Based on iFA Architecture	3	6
		2024/08/08	2024/08/08	Chinese Corporate Governance Association	Insider Trading Prevention, Corporate Law Practices, and Offshore Company Law Updates	3	
Representative of Institutional Director	Luke Chen	2024/12/24	2024/12/24	Chinese Corporate Governance Association	Infinite Business Opportunities in the Net-Zero Path: Strategy from Industry Perspectives	3	6
		2024/12/02	2024/12/02	Chinese Corporate Governance Association	AI and the Industrial Revolution: Generative AI Systems Based on iFA Architecture	3	
Representative of Institutional Director	Sylvia Cheng	2024/12/02	2024/12/02	Chinese Corporate Governance Association	Strategic Thinking for General Business Management (New Ninth Edition)	3	6
		2024/12/02	2024/12/02	Chinese Corporate Governance Association	AI and the Industrial Revolution: Generative AI Systems Based on iFA Architecture	3	
Independent Director	Po-Young Chu	2024/12/02	2024/12/02	Chinese Corporate Governance Association	Strategic Thinking for General Business Management (New Ninth Edition)	3	21
		2024/12/02	2024/12/02	Chinese Corporate Governance Association	AI and the Industrial Revolution: Generative AI Systems Based on iFA Architecture	3	
		2024/11/12	2024/11/12	Chinese Corporate Governance Association	Climate and Net-Zero Emissions Policy: Risks and Opportunities for Business Operations	3	
		2024/11/05	2024/11/05	Chinese Corporate Governance Association	Sustainability, Risk, and Cybersecurity in the AI Era	3	
		2024/08/06	2024/08/06	Chinese Corporate Governance Association	Business Strategies in Response to Global Economic Shifts	3	
		2024/05/07	2024/05/07	Chinese Corporate Governance Association	Corporate Legal Risk and Response: From Investment to Financing	3	
		2024/01/30	2024/01/30	Chinese Corporate Governance Association	Understanding Cybersecurity Threats Through Real-World Cases	3	
Independent Director	Huey-Jen Su	2024/09/24	2024/09/24	Chinese Corporate Governance Association	AI Applications: Legal and Audit Perspectives	3	17
		2024/09/11	2024/09/11	Taiwan Academy of Banking and Finance	Corporate Governance Forum: AML, CTF, and Tech-Based Fraud Prevention	3	
		2024/06/18	2024/06/18	Chinese Corporate Governance Association	Key Insights into Financial Statement Interpretation	3	
		2024/05/21	2024/05/21	Chinese Corporate Governance Association	Global Trends and Business Opportunities in Corporate Low-Carbon Innovation	3	
		2024/03/29	2024/03/29	Taiwan Institute for Sustainable Energy	2024 Taiwan & Asia-Pacific Sustainability Trends and Insights Forum	5	
Independent Director	Chang-Mou Yang	2024/12/19	2024/12/19	Taiwan Corporate Governance Association	Global Industrial Layout and Response Strategies	3	12
		2024/12/02	2024/12/02	Chinese Corporate Governance Association	Strategic Thinking for General Business Management (New Ninth Edition)	3	
		2024/12/02	2024/12/02	Chinese Corporate Governance Association	AI and the Industrial Revolution: Generative AI Systems Based on iFA Architecture	3	
		2024/08/08	2024/08/08	Association of Independent Directors Taiwan	Latest 2024 Global Economic Trends: Risk Indicators and Strategic Responses	3	

6.9 Report on the independence and competence of the CPA for the 2025 fiscal year

I. Basic profile:

CPA Names: Hui-Min Huang Ya-Ling Weng	Accounting firm: Deloitte Taiwan

II. Assessment details:

Drafted with reference to Article 47 of the Certified Public Accountant Act and No. 10 of the Code of Professional Ethics for Certified Public Accountants.

Item	Items for evaluation	Yes	No
1	No replacement has occurred over the last 7 years until the last time of certification.	V	
2	No significant financial interest with clients.	V	
3	Avoid unjustified relation with clients.	V	
4	CPAs shall ensure their assistants to be honest, fair, and independent.	V	
5	No audit and certification of the financial statements of the institutions that the CPAs have been working with 2 years prior to the present profession.	V	
6	No third party may act in the name of the CPA.	V	
7	No holding of the stocks issued by the Company and its subsidiaries.	V	
8	No financing with the Company and its affiliates.	V	
9	Joint investment or sharing profits with the Company or its affiliates.	V	
10	No engagement in the routine work for regular salary payment with the Company or its subsidiaries.	V	
11	No involvement with the job functions of the Company and its affiliates in decision-making.	V	
12	No engagement in any other business that may damage the status of independence.	V	
13	No management personnel of the company have spouses or relatives within the second degree of kinship.	V	
14	No acceptance of commission from any business.	V	
15	No penalty on violation of the principle of independence has ever been imposed.	V	

III. Competence and performance:

1. The audit of the Company's financial statements for each period were completed on time.
2. The periodical financial audits for the Company's investments were completed on time.
3. The Company was providing with financial and taxation advice in a timely manner.

IV. Outcome of assessment:

The independence and competence of the attesting CPA were assessed by the Company in accordance with Article 29 of the Corporate Governance Principles for TWSE/TPEx-listed Companies, with reference to Article 47 of the Certified Public Account Act, No.10 Bulletin on the Norm of Professional Ethics for Certified Public Accountant, and the Audit Quality Indicators (AQIs). The assessment found that CPAs Ming-Hui Huang and Ya-Ling Weng, from Deloitte Taiwan, indicated that both CPAs satisfied the Company's criteria for independence and competence, and were therefore qualified to act as the Company’s attesting CPAs.

For the 2025 fiscal year, the audit service fee is NTD 10,805 thousand. The relevant financial and tax report certification services were approved by the 17th meeting of the 11th Board of Directors on February 23, 2023, with no objections.

E INK HOLDINGS INC.

2024 Annual Report

No. 3, Li-Hsin Road One,
HsinChu Science Park, HsinChu,
Taiwan 300, R.O.C.
Tel : 886 3 564 3200
http://www.eink.com

Chairman Johnson Lee

E INK HOLDINGS INC.

No. 3, Li-Hsin Road One, HsinChu Science Park,
HsinChu, Taiwan 300, R.O.C.
Tel : 886 3 564 3200
www.eink.com